PCB PIEZOTRONICS
AN AMPHENOL COMPANY

Model HV356A45

Triaxial ICP® accel., 100 mV/g, 50 g, Adhesive mount, TEDS 1.0, Overcoated for High Voltage Use with integral cable.

Installation and Operating Manual

For assistance with the operation of this product,

contact the PCB Piezotronics, Inc.

Toll-free: 716-684-0001

24-hour SensorLine: 716-684-0001

Fax: 716-684-0987

E-mail: info@pcb.com

Web: www.pcb.com





General
OPERATING GUIDE

for use with

PIEZOELECTRIC ICP® ACCELEROMETERS

SPECIFICATION SHEET, INSTALLATION DRAWING
AND CALIBRATION INFORMATION ENCLOSED

PCB ASSUMES NO RESPONSIBILITY FOR DAMAGE CAUSED TO THIS PRODUCT AS A RESULT OF PROCEDURES THAT ARE INCONSISTENT WITH THIS OPERATING GUIDE.

1.0 INTRODUCTION

Congratulations on the purchase of a quality, ICP® acceleration sensor. In order to ensure the highest level of performance for this product, it is imperative that you properly familiarize yourself with the correct mounting and installation techniques before attempting to operate this device. If, after reading this manual, you have any additional questions concerning this sensor or its application, feel free to call a factory Application Engineer at 716-684-0001 or your nearest PCB sales representative.

2.0 ICP® ACCELEROMETERS

Powered by simple, inexpensive, constant-current signal conditioners, these sensors are easy to operate and interface with signal analysis, data acquisition and recording instruments. The following features further characterize ICP® sensors:

- Fixed voltage sensitivity, regardless of cable type or length.
- Low-impedance output signal, which can be transmitted over long cables in harsh environments with virtually no loss in signal quality.
- Two-wire operation with low cost coaxial cable, two-conductor ribbon wire or twisted-pair cabling.
- Low-noise, voltage-output signal compatible with standard readout, signal analysis, recording, and data acquisition equipment.
- Low cost per-channel - ICP® accelerometers require only an inexpensive, constant-current signal conditioner to operate.
- Intrinsic self-test feature – monitoring the sensor's output bias voltage provides an indication of proper operation, faulty condition, and bad cables.

In the rear of this manual you will find a **Specification Sheet**, which provides the complete performance characteristics of your particular sensor.

3.0 OPTIONAL FEATURES

Many sensors are supplied with standard, optional features. When listed before the model number, the following prefix letters indicate that the sensor is manufactured or supplied with a particular optional feature: **"A"** option: adhesive mount; **"HT"** option: extended high temperature range; **"J"** option: electrically ground isolated; **"M"** option: metric mounting thread; **"Q"** option: extended discharge time constant; **"T"** option: built-in transducer electronic data sheet (TEDS); and **"W"** option: attached, water-resistant cabling. Other prefix letters, such as **"K"**, **"KR"**, **"GK"**, **"GKR"**, **"KL"**, and **"GKL"**, indicate that the sensor is ordered in kit form, including interconnect cabling and signal conditioner. If you have any questions or concerns regarding optional features, consult the Vibration Division's product catalog or contact a PCB factory representative.

4.0 INSTALLATION OVERVIEW

When choosing a mounting method, consider closely both the advantages and disadvantages of each technique. Characteristics like location, ruggedness, amplitude range, accessibility, temperature, and portability are extremely critical. However, the most important and often overlooked consideration is the effect the mounting technique has on the high-frequency performance of the accelerometer.

® ICP is a registered trademark of PCB Group, Inc., which uniquely identifies PCB sensors that incorporate built-in microelectronics.

Shown in figure 1 are six possible mounting techniques and their effects on the performance of a typical piezoelectric accelerometer. (Note that not all of the mounting methods may apply to your particular sensor). The mounting configurations and corresponding graph demonstrate how the high-frequency response of the accelerometer may be compromised as mass is added to the system and/or the mounting stiffness is reduced.

NOTE: *The low-frequency response is unaffected by the mounting technique. This roll-off behavior is typically fixed by the sensor's built-in electronics. However, when operating AC-coupled signal conditioners with readout devices having an input impedance of less than one megohm, the low frequency range may be affected. If necessary, contact a factory representative for further assistance.*

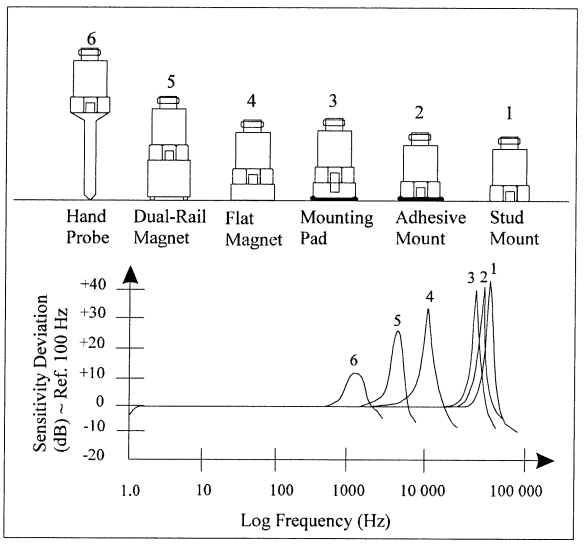

Figure 1. Assorted Mounting Configurations and Their Effects on High Frequency

4.1 STUD MOUNT

This mounting technique requires smooth, flat contact surfaces for proper operation and is recommended for permanent and/or secure installations. Stud mounting is also recommended when testing at high frequencies.

NOTE: *Do NOT attempt mounting on curved, rough, or uneven surfaces, as the potential for misalignment and limited contact surface may significantly reduce the sensor's upper operating frequency range.*

STEP 1: First, prepare a smooth, flat mounting surface, then drill and tap a mounting hole in the center of this area as shown in Figure 2 and in accordance with the enclosed **Installation Drawing**.

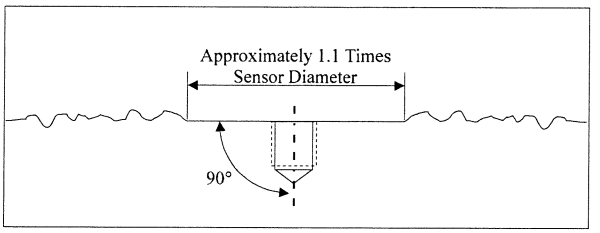

Figure 2. Mounting Surface Preparation

A precision-machined mounting surface with a minimum finish of 63 µin (0.00016 mm) is recommended. (If it is not possible to properly prepare the test structure mounting surface, consider adhesive mounting as a possible alternative). Inspect the area, checking that there are no burrs or other foreign particles interfering with the contact surface.

STEP 2: Wipe clean the mounting surface and spread on a light film of grease, oil, or similar coupling fluid prior to installation.

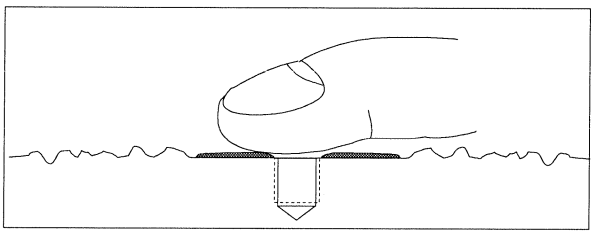

Figure 3. Mounting Surface Lubrication

Adding a coupling fluid improves vibration transmissibility by filling small voids in the mounting surface and increasing the mounting stiffness. For semi-permanent mounting, substitute epoxy or another type of adhesive.

STEP 3: Screw the mounting stud into the base of accelerometer and hand-tighten (this step is unnecessary for units having an integral mounting stud). Then, screw the sensor into the tapped hole that was prepared in the test object. Tighten the unit in place by applying, with a torque wrench, the recommended mounting torque, as listed on the enclosed **Installation Drawing**.

NOTE: *It is important to use a torque wrench during this step. Under-torquing the sensor may not adequately couple the device; over-torquing may result in stud failure.*

4.2 ADHESIVE MOUNT

Adhesive mounting is often used for temporary installation or when the test object surface cannot be adequately prepared for stud mounting. Adhesives like hot glue and wax perform well for temporary installations whereas two-part epoxies and quick-bonding gels (super glue) provide a more permanent installation. Two

techniques are used for adhesive mounting; they are via an adhesive mounting base (method 1 below) or direct adhesive mounting (method 2 below).

NOTE: *Adhesively mounted sensors often exhibit a reduction in high-frequency range. Generally, smooth surfaces and stiff adhesives provide the best high frequency response.*

METHOD 1 - Adhesive Mounting Base

This method involves attaching a base to the test structure, then securing the sensor to the base. This allows for easy removal of the accelerometer. Also, since many bases are manufactured of "hard-coated" aluminum, they provide electrical isolation to eliminate ground loops and reduce electrical interference that may propagate from the surface of the test object.

STEP 1: Prepare a smooth, flat mounting surface. A minimum surface finish of 63 µin (0.00016 mm) generally works best.

STEP 2: Stud-mount the sensor to the flat side of the appropriate adhesive mounting base according to the guidelines set forth in **STEPS 2** and **3** of the Stud Mount Procedure presented above.

STEP 3: Place a small portion of adhesive on the underside of the mounting base (the underside is discernable by the concentric grooves which are designed to accept the adhesive). Firmly press down on the assembly to displace any extra adhesive remaining under the base.

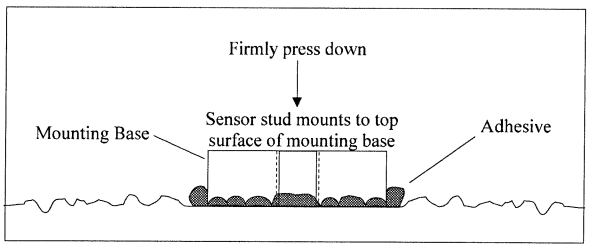

Figure 4. Mounting Base: Adhesive Installation

METHOD 2 - Direct Adhesive Mount

For restrictions of space or for convenience, most sensors can be adhesive-mounted directly to the test structure (an exception being units having integral mounting studs).

STEP 1: Prepare a smooth, flat mounting surface. A minimum surface finish of 63 µin (0.00016 mm) generally works best.

STEP 2: Place a small portion of adhesive on the underside of the sensor. Firmly press down on the top of the assembly to displace any adhesive. Be aware that excessive amounts of adhesive can make sensor removal difficult. Also, adhesive that may invade the tapped mounting hole in the base of the sensor will compromise future ability to stud mount the unit.

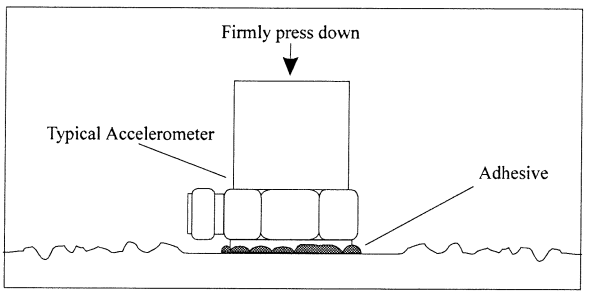

Figure 5. Direct Adhesive Mounting

4.2-1 ADHESIVE MOUNT REMOVAL (other than wax)

NOTE: *A debonder should always be used to avoid sensor damage.*

To avoid damaging the accelerometer, a debonding agent must be applied to the adhesive prior to sensor removal. With so many adhesives in use (everything from super glues, dental cement, epoxies, etc), there is no universal debonding agent available. The debonder for the Loctite 454 adhesive that PCB offers is Acetone. If you are using anything other than Loctite 454, you will have to check with the individual manufacturers for their debonding recommendations. The debonding agent must be allowed to penetrate the surface in order to properly react with the adhesive, so it is advisable to wait a few minutes before removing the sensor.

After the debonding agent has set, you can use an ordinary open-end wrench if the accelerometer has a hex base or square base, or the supplied removal tool for teardrop accelerometers. After attaching either, use a gentle shearing (or twisting) motion (by hand only) to remove the sensor from the test structure.

4.3 MAGNETIC MOUNT

Magnetic mounting provides a convenient means for making quick, portable measurements and is commonly used for machinery condition monitoring, predictive maintenance, spot checks, and vibration trending applications.

NOTE: *The correct magnet choice and an adequately prepared mounting surface are critical for obtaining reliable measurements, especially at high frequencies. Poor installations can cause as much as a 50% drop in the sensor frequency range.*

Not every magnet is suitable for all applications. For example, rare earth magnets are commonly used because

of their high strength. Flat magnets work well on smooth, flat surfaces, while dual-rail magnets are required for curved surfaces such as motor housings and pipes. In the case of non-magnetic or rough surfaces, it is recommended that the user first weld, epoxy, or otherwise adhere a steel mounting pad to the test surface. This provides a smooth location for mounting and a target to insure that subsequent measurements for trending purposes are taken at the same location.

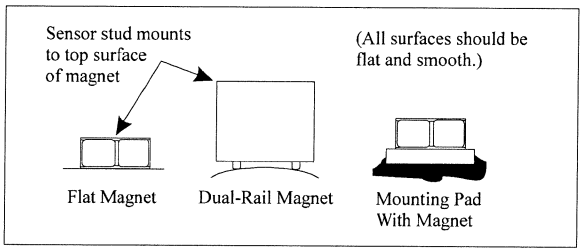

Figure 6. Magnet Types

STEP 1: Prepare a smooth, flat mounting surface. A minimum surface finish of 63 µin (0.00016 mm) generally works best. After cleaning the surface and checking for burrs, apply a light film of silicone grease, machine oil, or similar-type coupling fluid.

STEP 2: After choosing the correct magnet type, inspect the magnet, verifying that its mounting surfaces are flat and smooth.

STEP 3: Stud-mount the accelerometer to the appropriate magnet according to the guidelines set forth in **STEP 3** of the above Stud Mount Procedure.

STEP 4: To avoid damage to the sensor, install the magnet/sensor assembly to the prepared test surface by gently "rocking" or "sliding" it into place.

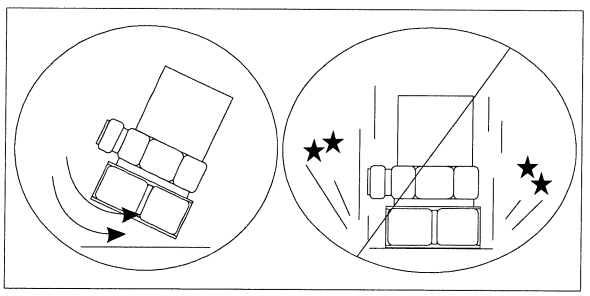

Figure 7. Magnet Mounting

CAUTION: *Magnetically mounting of an accelerometer has the potential to generate very high (and very damaging) acceleration (g) levels. To prevent such damage, exercise caution and install the assembly gently by rocking it into place. If shock is expected to be a particular concern, use a sensor with built-in shock protection. For further assistance, contact a factory representative.*

4.4 HANDHELD OR PROBE TIP MOUNT

This method is NOT recommended for most applications. Both the accuracy and repeatability at low (<5 Hz) and high frequency (>1 kHz) ranges are questionable. It is generally used only for machinery condition monitoring, when installation space is restricted, or other portable trending applications. The technique, however, can be useful for initially determining locations of greatest vibration to establish a permanent sensor installation point.

5.0 CABLING

Care and attention to cable installation and cable condition is essential as the reliability and accuracy of any measurement system is no better than that of its weakest link. Do to the nature of vibration measurements, all sensor cables will ultimately fatigue and fail. Good installation practice will extend the life of a cable, however, it is highly recommended to keep spare cables on hand to enable continuation of the test in the event of a cable failure.

STEP 1: Ascertain that you have the correct cable type.

One cable type cannot satisfy all applications. ICP® sensors can be operated with any ordinary two-wire or coaxial cable. Special, low-noise cables that are typically recommended for use with high-impedance, charge-output sensors can also be used. For applications requiring conformity to CE, low noise cables are essential. Industrial applications often require shielded, twisted-pair cables to reduce the effects of EMI and RFI that is present near electrical motors and machinery. Teflon-jacketed cabling may be necessary to withstand corrosive environments and higher temperatures. Consult the Vibration Division's product catalog for more information about cables or feel free to contact a factory representative for a specific recommendation on cables that are best suited for your application.

STEP 2: Connect the cable to the accelerometer.

A small amount of thread-locking compound placed on the connector threads prior to attachment helps secure the cable during testing. In wet, oily, or dirty environments, the connection can be sealed with silicone rubber sealant, O-rings, and flexible, heat-shrink tubing.

Coaxial Cables: Make connection by inserting the cable's connector pin into the sensor's mating socket. Then thread the connector into place by turning the cable connector's outer shell onto the accelerometer's electrical connector.

NOTE: *Do not spin the accelerometer while holding the cable connector stationary, as this will cause undue*

friction on the center pin of the cable connector and lead to premature fatigue.

Multi-pin connectors: Make connection by inserting the sensor's mating pins onto the cable connector's mating sockets. Then thread the connector into place by turning the cable connector's outer shell onto the accelerometer's electrical connector.

Pigtail Connections: Certain miniature accelerometers and shock sensors are provided with lightweight cables attached to "Pigtail" connections. This type of connection reduces overall weight and incidence of connection intermittency under shock conditions. In the event of a cable or connection failure, the cables may be repaired in the field simply by re-soldering the stripped leads to the exposed pins on the sensor. (Check the **Installation Drawing** to determine signal and ground pins). In many cases, it is also helpful to protect the solder joint with heat-shrink tubing or epoxy.

NOTE: *If you do not have the experience or resources to attach pigtail leads, consult PCB to discuss factory attachment. Damage to internal electronics may be caused by excessive heat during soldering and such failure is not covered by warranty.*

STEP 3: Route the cable to the signal conditioner, making certain to relieve stress on the sensor/cable connection. Also, minimize cable motion by securing it with tape, clamps or ties at regular intervals.

Common sense should be used to avoid physical damage and minimize electrical noise. For instance, avoid routing cables near high-voltage wires. Do not route cables along floors or walkways where they may be stepped on or become contaminated. To avoid ground loops, shielded cables should have the shield grounded at one end only, typically at the signal conditioner.

STEP 4: Finally, connect the remaining cable end to the signal conditioner. It is good practice to dissipate any electrical charge that may have accumulated in the cable by shorting the signal pin to the ground pin or shell prior to attachment.

6.0 POWERING

All ICP® sensors require constant current excitation for proper operation. For this reason, use only PCB constant-current signal conditioners or other approved constant-current sources. A typical system schematic is shown in Figure 8.

NOTE: *Damage to the built-in electronics resulting from the application of incorrect power, or the use of an unapproved power source, is NOT covered by warranty.*

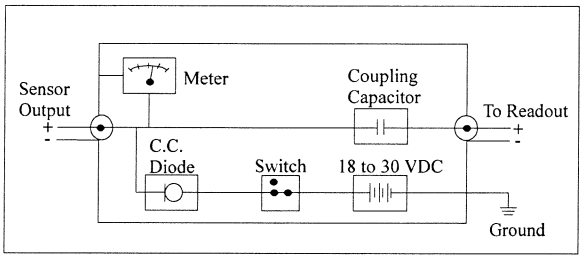

Figure 8. Typical System Schematic

The power supply consists of a current-regulated, 18 to 30 VDC source. This power is regulated by a current-limiting circuit, which provides the constant-current excitation required for proper operation of ICP® sensors. In general, battery-powered devices offer versatility for portable, low-noise measurements, whereas line-powered units provide the capability for continuous monitoring. Consult the Vibration Division's product catalog for more information about signal conditioners.

NOTE: *Under no circumstances should a voltage be supplied to an ICP® accelerometer without a current-regulating diode or equivalent electrical circuit. This may include ohmmeters, multi-meters and continuity testers.*

Meters or LEDs are used on PCB signal conditioners to monitor the bias voltage on the sensor output signal, to check sensor operation, and detect cable faults. Normally, a "yellow" reading indicates an open circuit; "green" indicates normal operation; and "red" indicates either a short or overload condition. Finally, a capacitor at the output stage of the device removes the sensor output bias voltage from the measurement signal. This provides a zero-based, AC-coupled output signal that is compatible with most standard readout devices.

NOTE: *Units having a low bias voltage may be in the "red," when actually they are working properly. If suspect, the bias voltage can be checked with a voltmeter attached to a "T" connector installed on the input connector to the signal conditioner.*

Note: *For readout devices having an input impedance near one gigohm (as encountered with some A to D converters), it may be necessary to place a one megohm resistor in parallel to the readout input to eliminate slow turn-on and signal drift.*

Today, many FFT analyzers, data acquisition modules, and data collectors have the proper constant-current excitation built-in for direct use with ICP® sensors. Before using this feature, however, check that the supply voltage and constant current are within acceptable limits for use with your particular sensor. (Check enclosed **Specification Sheet**). Please contact the respective signal

conditioner manufacturer or check the product manual for more information.

7.0 OPERATING

After completing the system setup, switch on the signal conditioner and allow 1 to 2 minutes for the system to stabilize. The meter (or LED) on the signal conditioner should be reading "green." This indicates proper operation and you may begin taking measurements. If a faulty condition is indicated (red or yellow reading), first check all system connections, then check the functionality of the cable and signal conditioner. If the system still does not operate properly, consult a PCB factory representative.

NOTE: *Always operate the accelerometer within the limitations listed on the enclosed* ***Specification Sheet****. Operating the device outside these parameters can cause temporary or permanent damage to the sensor.*

8.0 ACCELEROMETER CALIBRATION

Accelerometer calibration provides, with a definable degree of accuracy, the necessary link between the physical quantity being measured and the electrical signal generated by the sensor. In addition, other useful information concerning operational limits, physical parameters, electrical characteristics, or environmental influences may also be determined. Without this link, analyzing data becomes a nearly impossible task. Fortunately, most sensor manufacturers provide a calibration record that documents the exact characteristics of each sensor. (The type and amount of data varies depending on the manufacturer, sensor type, contractual regulations, and other special requirements).

Under normal conditions, piezoelectric sensors are extremely stable, and their calibrated performance characteristics do not change over time. However, the sensor may be temporarily or permanently affected by harsh environments influences or other unusual conditions that may cause the sensor to experience dynamic phenomena outside of its specified operating range. This change manifests itself in a variety of ways, including: a shift of the sensor resonance due to a cracked crystal; a temporary loss of low-frequency measuring capability due to a drop in insulation resistance; or total failure of the built-in microelectronic circuit due to a high mechanical shock.

For these reasons, it is recommended that a recalibration cycle be established for each accelerometer. This schedule is unique and is based on a variety of factors, such as: extent of use, environmental conditions, accuracy requirements, trend information obtained from previous calibration records, contractual regulations, frequency of "cross-checking" against other equipment, manufacturer recommendation, and any risk associated with incorrect readings. International standards, such as ISO 10012-1, provide insight and suggest methods for determining recalibration intervals for most measuring equipment. With the above information in mind and under "normal" circumstances, PCB conservatively suggests a 12- to 24-month recalibration cycle for most piezoelectric accelerometers.

NOTE: *It is good measurement practice to verify the performance of each accelerometer with a Handheld Shaker or other calibration device before and after each measurement. The PCB Handheld Shaker operates at a fixed frequency and known amplitude (1.0 g) to provide a quick check of sensor sensitivity.*

8.1 RECALIBRATION SERVICE

PCB offers recalibration services for our piezoelectric accelerometers, as well as units produced by other manufacturers. Our internal metrology laboratory is certified to ISO 9001, accredited by A2LA to ANSI/IEC 17025 and ANSI/NCSL Z540-1, complies with ISO 10012-1 (and former MIL-STD-45662A), and uses equipment directly traceable to NIST. Our investment in equipment, traceability and conformance to industry standards ensures accurate calibration against relevant specifications, in a timely fashion.

8.2 BACK-TO-BACK CALIBRATION THEORY

Many companies choose to purchase the equipment necessary to perform the recalibration procedure in house. While this may result in both a savings of time and money, it has also been attributed to incorrect readings and costly errors. Therefore, in an effort to prevent the common mistakes associated with customer-performed calibration, this document includes a broad overview of the Back-to-Back Calibration technique. This technique provides a quick and easy method for determining the sensitivity of a test accelerometer over a wide frequency range.

Back-to-Back Calibration is perhaps the most common method for determining the sensitivity of piezoelectric accelerometers. This method relies on a simple comparison to a previously calibrated accelerometer, typically referred to as a reference standard.

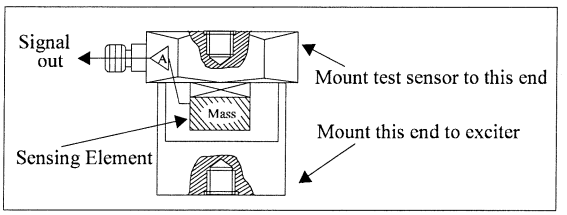

Figure 9. Reference Standard Accelerometer

These high-accuracy devices, which are directly traceable to a recognized standards laboratory, are designed for stability, as well as configured to accept a test accelerometer. By mounting a test accelerometer to the reference standard and then connecting this combination to a suitable vibration source, it is possible to vibrate both devices and compare the data as shown in Figure 10. (Test set-ups may be automated and vary, depending on the type and number of accelerometers being calibrated).

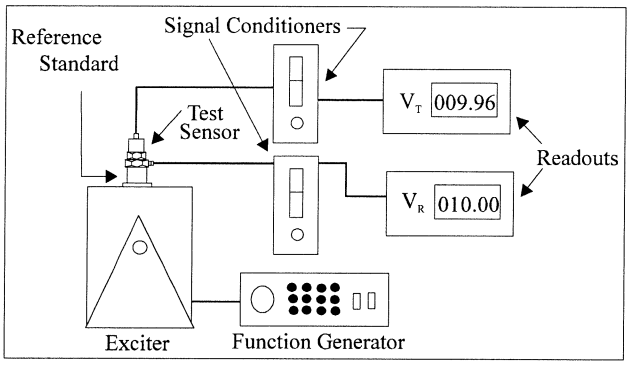

Figure 10. Typical Back-to-Back Calibration System

Because the acceleration is the same on both sensors, the ratio of their outputs (V_T/V_R) must also be the ratio of their sensitivities. With the sensitivity of the reference standard (S_R) known, the exact sensitivity of the test sensor (S_T) is easily calculated by using the following equation:

$$S_T = S_R (V_T/V_R)$$

By varying the frequency of the vibration, the sensor may be calibrated over its entire operating frequency range. The typical response of an unfiltered accelerometer is shown in Figure 11.

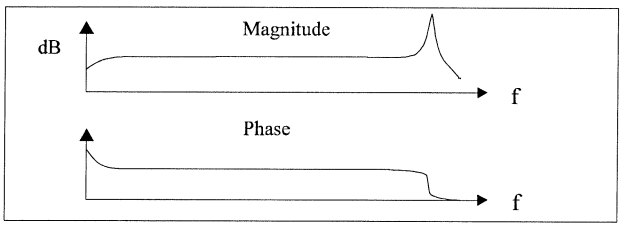

Figure 11. Typical Test Accelerometer Response

8.3 PCB CALIBRATION PROCEDURE

Numerous precautions are taken at PCB to insure accurate and repeatable results. This section provides a brief overview of the primary areas of concern.

Since the Back-to-Back Calibration technique relies on each sensor experiencing an identical acceleration level, proper mounting of the test sensor to the reference standard is imperative. Sensors with mounting holes are attached directly to the reference standard with a stud tightened to the recommended mounting torque. A shouldered mounting stud is typically used to prevent the stud from "bottoming out" in the hole. Both mounting surfaces are precision-machined and lapped to provide a smooth, flat interface according to the manufacturer's specification. A thin layer of silicone grease is placed between the mating surfaces to fill any imperfections and increase the mounting stiffness. The cables are stress-relieved by first routing them to the shaker head, then to a nearby stationary location. This reduces cable motion, which is especially important when testing charge output sensors, and helps to prevent extraneous motion or stresses from being imparted into the system. A typical set-up is shown in Figure 12.

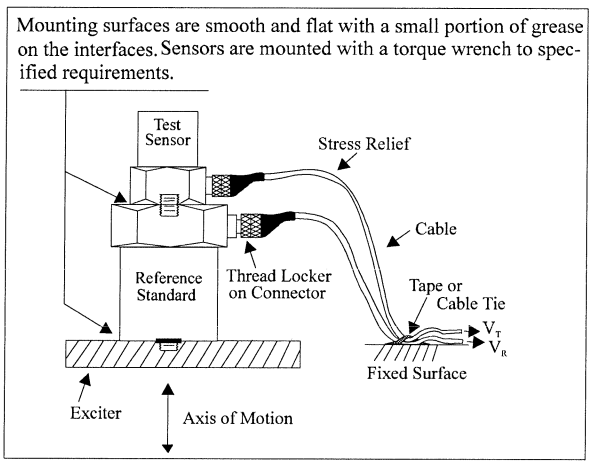

Figure 12. Typical Calibration Set-Up

Adhesively mounted sensors use similar practices. However, in this case, a small portion of quick-bonding gel, or similar temporary adhesive, is used to attach the test sensor to a reference standard designed with a smooth, flat mounting surface.

In addition to mounting, the selection of the proper equipment is critical. Some of the more important considerations include: 1) the reference standard must be specified and previously calibrated over the frequency and/or amplitude range of interest; 2) the shaker should be selected to provide minimal transverse (lateral) motion and minimal distortion; and 3) the quality of the meters, signal generator, and other devices should be selected so as to operate within the limits of permissible error.

8.4 COMMON MISTAKES

Most calibration errors are caused by simply overlooking some of the fundamental principals of dynamics. This section attempts to address some of the more common concerns.

For stud-mount sensors, always mount the accelerometer directly to the reference standard. Ensure that the mounting surfaces are smooth, flat, and free of any burrs. Always use a

coupling fluid, such as silicone grease, in the mounting interface to maintain a high mounting stiffness. Mount the sensor according to the manufacturer's recommended mounting torque. DO NOT use any intermediate mounting adaptors, as the mounted resonant frequency may be reduced, and thereby compromise the high-frequency performance. If necessary, use adaptor studs.

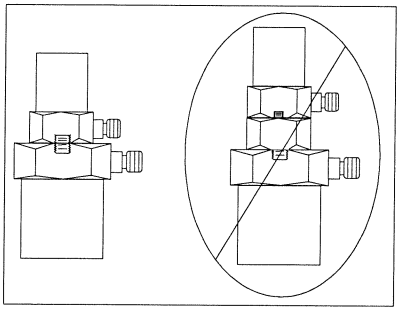

Figure 13. Stud Mounting

For adhesive mount sensors, use a thin, stiff layer of temporary adhesive such as quick-bonding gel or superglue. DO NOT use excessive amounts of glue or epoxy, as the mounting stiffness may be reduced and compromise high-frequency performance. It may also damage the sensor during removal.

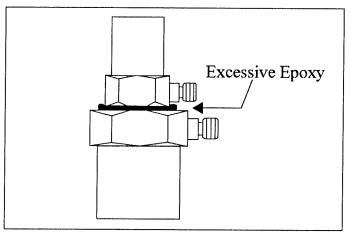

Figure 14. Incorrect Adhesive Mounting

Triaxial accelerometers should always be mounted directly to the reference standard. Unless absolutely required, DO NOT use adaptors to re-orient the sensor along the axis of motion, as the mounting stiffness may be altered. The vibration at the test sensor's sensing element may differ from the vibration at the reference standard due to a "cantilever" effect, seen in Figure 15.

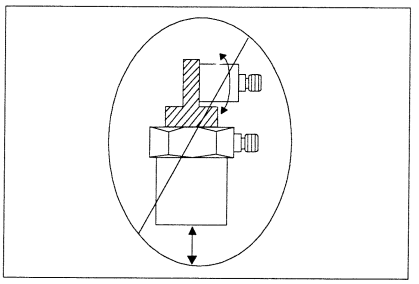

Figure 15. Mounting Triaxial Sensors (Incorrect)

Understand Back-to-Back Calibration limitations. Do not expect the uncertainty of calibration to be any better than ±2%. (In fact, the uncertainty may be as high as ±3% or ±4% for frequencies <10 Hz or >2 kHz.) Since large sensors may affect high-frequency accuracy, verify that the test sensor does not mass load the reference standard. Validate your calibration system with another accelerometer prior to each calibration session. Check with the manufacturer for exact system specifications.

8.5 CONCLUSIONS

Without an adequate understanding of dynamics, determining what, when, and how to test a sensor is a difficult task. Therefore, each user must weigh the cost, time, and risk associated with self-calibration versus utilizing the services of an accredited laboratory.

9.0 SERVICE

See the supplement sheet, contained in this manual, for information on our warranty, service, repair, and return policies and instructions.

When unexpected measurement problems arise, call our 24-hour SensorLine[SM] to discuss your immediate dynamic instrumentation needs with a factory representative.
Dial 716-684-0001.

PCB PIEZOTRONICS INC
VIBRATION DIVISION

3425 Walden Avenue, Depew, NY 14043-2495 USA **Vibration Division toll-free** 888-684-0013
24-hour SensorLine[SM] 716-684-0001 **FAX** 716-685-3886 **E-mail** vibration@pcb.com **Website** www.pcb.com

A PCB GROUP COMPANY ISO 9001 CERTIFIED A2LA ACCREDITED to ISO 17025

© 2002 PCB Group, Inc. In the interest of constant product improvement, specifications are subject to change without notice.
PCB and ICP are registered trademarks of PCB Group, Inc. SensorLine is a service mark of PCB Group, Inc.
All other trademarks are properties of their respective owners.

Manual Number: 18292
Manual Revision: B
ECN Number: 19829

VIB-ICPMANUAL-0

Printed in U.S

Model Number HV356A45	TRIAXIAL ICP® ACCELEROMETER	Revision: A ECN #: 56906

Performance	ENGLISH	SI	
Sensitivity(± 10 %)	100 mV/g	10.2 mV/(m/s²)	
Measurement Range	± 50 g pk	± 490 m/s² pk	
Frequency Range(+/- 5 %)	0.7 to 5,000 Hz	0.7 to 5,000 Hz	
Frequency Range(+/- 10 %)	0.4 to 6,000 Hz	0.4 to 6,000 Hz	
Resonant Frequency	≥ 30 kHz	≥ 30 kHz	
Broadband Resolution(1 to 10,000 Hz)	0.0005 g rms	0.005 m/s² rms	[1]
Non-Linearity	≤ 1 %	≤ 1 %	[2]
Transverse Sensitivity	≤ 7 %	≤ 7 %	
TEDS Compliant(Per IEEE 1451.4)	Yes	Yes	
Environmental			
Overload Limit(Shock)	± 5,000 g pk	± 49,050 m/s² pk	
Temperature Range(Operating)	-65 to 185 °F	-54 to 85 °C	
Temperature Response	See Graph	See Graph	[1]
Base Strain Sensitivity	.001 g/με	.01 (m/s²)/με	[1]
Electrical			
Excitation Voltage	20 to 30 VDC	20 to 30 VDC	
Constant Current Excitation	2 to 20 mA	2 to 20 mA	
Output Impedance	≤ 200 Ohm	≤ 200 Ohm	
Output Bias Voltage	8 to 12 VDC	8 to 12 VDC	
Discharge Time Constant	0.8 to 2.4 sec	0.8 to 2.4 sec	
Settling Time(within 10% of bias)	≤ 5 sec	≤ 5 sec	
Spectral Noise(1 Hz)	125 μg/√Hz	1,226 (μm/sec²)/√Hz	[1]
Spectral Noise(10 Hz)	40 μg/√Hz	392 (μm/sec²)/√Hz	[1]
Spectral Noise(100 Hz)	15 μg/√Hz	147 (μm/sec²)/√Hz	[1]
Spectral Noise(1 kHz)	4 μg/√Hz	39.2 (μm/sec²)/√Hz	[1]
Electrical Isolation	2,000 VDC	2,000 VDC	[3]
Physical			
Sensing Element	Ceramic	Ceramic	
Sensing Geometry	Shear	Shear	
Housing Material	Polymer	Polymer	
Sealing	Hermetic	Hermetic	
Size (Height x Length x Width)	0.50 in x 0.80 in x 0.50 in	12.7 mm x 20.3 mm x 12.7 mm	
Weight(without cable)	0.20 oz	5.7 gm	[1]
Electrical Connector	Integral Cable	Integral Cable	
Electrical Connection Position	Side	Side	
Cable Termination	1/4-28 4-Pin Jack	1/4-28 4-Pin Jack	
Cable Length	10.00 ft	3.0 m	
Cable Type	4-conductor shielded, polyolefin jacket	4-conductor shielded, polyolefin jacket	
Mounting	Adhesive	Adhesive	

Typical Sensitivity Deviation vs Temperature

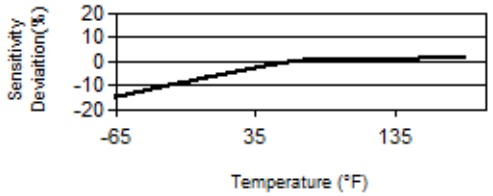

CE

UK CA [4]

All specifications are at room temperature unless otherwise specified.
In the interest of constant product improvement, we reserve the right to change specifications without notice.
ICP® is a registered trademark of PCB Piezotronics, Inc.

OPTIONAL VERSIONS

Optional versions have identical specifications and accessories as listed for the standard model except where noted below. More than one option may be used.

NOTES:

[1]Typical.
[2]Zero-based, least-squares, straight line method.
[3]Maximum.
[4]See PCB Declaration of Conformance PS023 for details.

SUPPLIED ACCESSORIES:

Model 080A109 Petro Wax (1)
Model 080A90 Quick Bonding Gel (1)
Model ACS-1T NIST traceable triaxial amplitude response, 10 Hz to upper 5% frequency. (1)

Entered: ND	Engineer: MJN	Sales: KK	Approved: NJF	Spec Number:
Date: 08/12/2026	Date: 08/12/2026	Date: 08/12/2026	Date: 08/12/2026	30036

PCB PIEZOTRONICS
AN AMPHENOL COMPANY
Phone: 716-684-0001
Fax: 716-684-0987
E-Mail: info@pcb.com
3425 Walden Avenue, Depew, NY 14043

PCB Piezotronics Inc. claims proprietary rights in the information disclosed hereon. Neither it nor any reproduction thereof will be disclosed to others without the written consent of PCB Piezotronics Inc.

80034

REVISIONS		
REV	DESCRIPTION	DIN
NR	RELEASED TO DRAFTING	56766

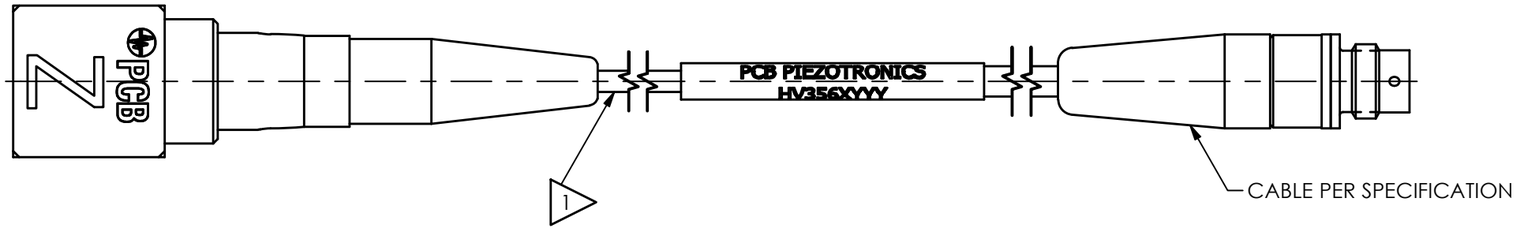

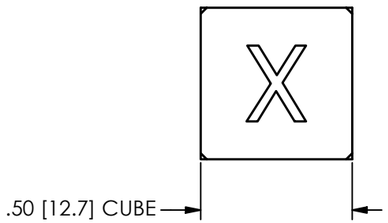

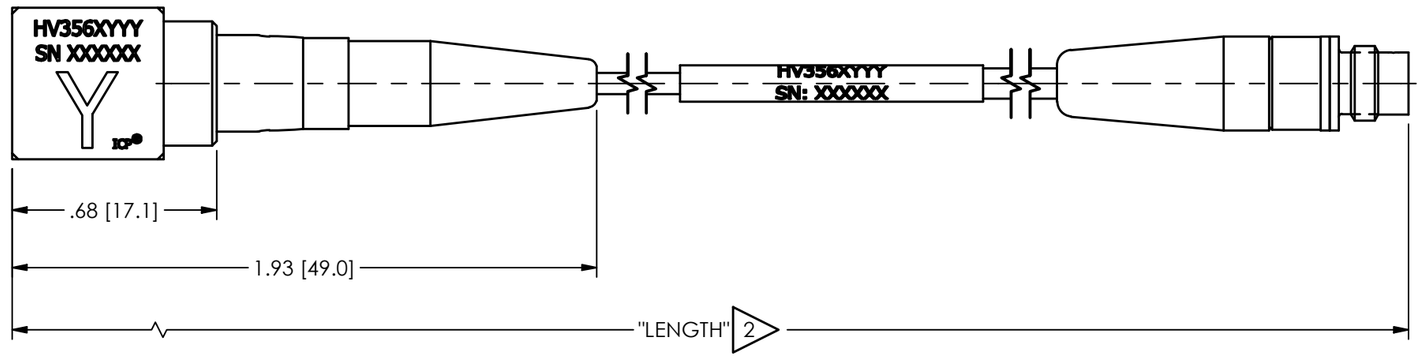

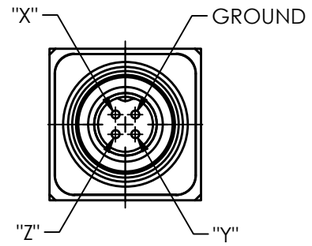

2 LENGTH WILL VARY IN FEET OR METERS DEPENDING ON THE MODEL

1 HEAT SHRINK OUTER SLEEVE

UNLESS OTHERWISE SPECIFIED TOLERANCES ARE:	
DIMENSIONS IN INCHES DECIMALS XX ±.03 XXX ±.010 ANGLES ± 2 DEGREES	DIMENSIONS IN MILLIMETERS [IN BRACKETS] DECIMALS X ± 0.8 XX ± 0.25 ANGLES ± 2 DEGREES
CABLE TOLERANCES IN ENGLISH 1"≤ LENGTH < 1' = +1"/ - 0 1'≤ LENGTH < 5' = +2"/ - 0 5'≤ LENGTH < 100' = +6"/ - 0 100'≤ LENGTH = +1'/ - 0	CABLE TOLERANCES IN METRIC 2.54cm ≤ LENGTH < 30.5cm = +2.54cm/ - 0 30.5cm ≤ LENGTH < 1.5m = +5.1cm/ - 0 1.5m ≤ LENGTH < 30.5m = +15.2cm/ - 0 30.5m ≤ LENGTH = +30.5cm/ - 0
FILLETS AND RADII .003 - .005	FILLETS AND RADII 0.07 - 0.13

DRAWN		CHECKED		ENGINEER	
AME	7/22/26	JDM	7/22/26	KDW	7/22/26

TITLE

OUTLINE DRAWING
.50" CUBE, 1/4-28 4-PIN CONNECTOR
NON-CONDUCTIVE TRIAXIAL
ACCELEROMETER

PCB PIEZOTRONICS
AN AMPHENOL COMPANY
3425 WALDEN AVE. DEPEW, NY 14043
(716) 684-0001 E-MAIL: sales@pcb.com

CODE IDENT. NO.	SIZE	DWG. NO.
52681	B	80034
SCALE: 2X		SHEET 1 OF 1

Model 356A45

Platinum Stock Product; Triaxial ICP® accel., 100 mV/g, 50 g, 1/4-28 4-pin connector, Adhesive mount, TEDS 1.0

Installation and Operating Manual

For assistance with the operation of this product,
contact the PCB Piezotronics, Inc.

Toll-free: 716-684-0001
24-hour SensorLine: 716-684-0001
Fax: 716-684-0987
E-mail: info@pcb.com
Web: www.pcb.com





General
OPERATING GUIDE

for use with

PIEZOELECTRIC ICP® ACCELEROMETERS

SPECIFICATION SHEET, INSTALLATION DRAWING
AND CALIBRATION INFORMATION ENCLOSED

PCB ASSUMES NO RESPONSIBILITY FOR DAMAGE CAUSED TO THIS PRODUCT AS A RESULT OF PROCEDURES THAT ARE INCONSISTENT WITH THIS OPERATING GUIDE.

1.0 INTRODUCTION

Congratulations on the purchase of a quality, ICP® acceleration sensor. In order to ensure the highest level of performance for this product, it is imperative that you properly familiarize yourself with the correct mounting and installation techniques before attempting to operate this device. If, after reading this manual, you have any additional questions concerning this sensor or its application, feel free to call a factory Application Engineer at 716-684-0001 or your nearest PCB sales representative.

2.0 ICP® ACCELEROMETERS

Powered by simple, inexpensive, constant-current signal conditioners, these sensors are easy to operate and interface with signal analysis, data acquisition and recording instruments. The following features further characterize ICP® sensors:

- Fixed voltage sensitivity, regardless of cable type or length.
- Low-impedance output signal, which can be transmitted over long cables in harsh environments with virtually no loss in signal quality.
- Two-wire operation with low cost coaxial cable, two-conductor ribbon wire or twisted-pair cabling.
- Low-noise, voltage-output signal compatible with standard readout, signal analysis, recording, and data acquisition equipment.
- Low cost per-channel - ICP® accelerometers require only an inexpensive, constant-current signal conditioner to operate.
- Intrinsic self-test feature – monitoring the sensor's output bias voltage provides an indication of proper operation, faulty condition, and bad cables.

In the rear of this manual you will find a **Specification Sheet**, which provides the complete performance characteristics of your particular sensor.

3.0 OPTIONAL FEATURES

Many sensors are supplied with standard, optional features. When listed before the model number, the following prefix letters indicate that the sensor is manufactured or supplied with a particular optional feature: **"A"** option: adhesive mount; **"HT"** option: extended high temperature range; **"J"** option: electrically ground isolated; **"M"** option: metric mounting thread; **"Q"** option: extended discharge time constant; **"T"** option: built-in transducer electronic data sheet (TEDS); and **"W"** option: attached, water-resistant cabling. Other prefix letters, such as **"K"**, **"KR"**, **"GK"**, **"GKR"**, **"KL"**, and **"GKL"**, indicate that the sensor is ordered in kit form, including interconnect cabling and signal conditioner. If you have any questions or concerns regarding optional features, consult the Vibration Division's product catalog or contact a PCB factory representative.

4.0 INSTALLATION OVERVIEW

When choosing a mounting method, consider closely both the advantages and disadvantages of each technique. Characteristics like location, ruggedness, amplitude range, accessibility, temperature, and portability are extremely critical. However, the most important and often overlooked consideration is the effect the mounting technique has on the high-frequency performance of the accelerometer.

® ICP is a registered trademark of PCB Group, Inc., which uniquely identifies PCB sensors that incorporate built-in microelectronics.

Shown in figure 1 are six possible mounting techniques and their effects on the performance of a typical piezoelectric accelerometer. (Note that not all of the mounting methods may apply to your particular sensor). The mounting configurations and corresponding graph demonstrate how the high-frequency response of the accelerometer may be compromised as mass is added to the system and/or the mounting stiffness is reduced.

NOTE: *The low-frequency response is unaffected by the mounting technique. This roll-off behavior is typically fixed by the sensor's built-in electronics. However, when operating AC-coupled signal conditioners with readout devices having an input impedance of less than one megohm, the low frequency range may be affected. If necessary, contact a factory representative for further assistance.*

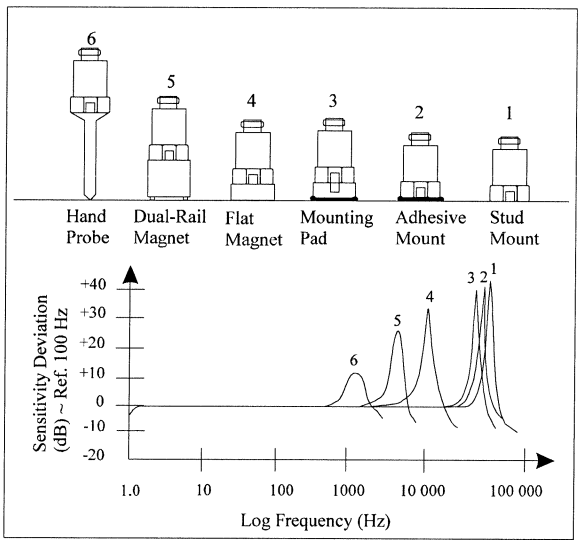

Figure 1. Assorted Mounting Configurations and Their Effects on High Frequency

4.1 STUD MOUNT

This mounting technique requires smooth, flat contact surfaces for proper operation and is recommended for permanent and/or secure installations. Stud mounting is also recommended when testing at high frequencies.

NOTE: *Do NOT attempt mounting on curved, rough, or uneven surfaces, as the potential for misalignment and limited contact surface may significantly reduce the sensor's upper operating frequency range.*

STEP 1: First, prepare a smooth, flat mounting surface, then drill and tap a mounting hole in the center of this area as shown in Figure 2 and in accordance with the enclosed **Installation Drawing**.

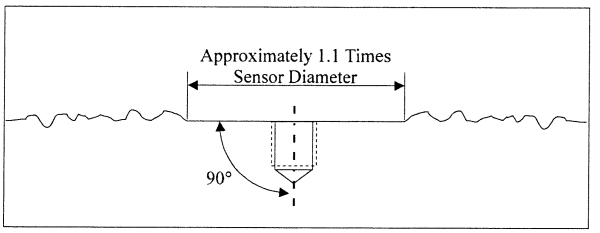

Figure 2. Mounting Surface Preparation

A precision-machined mounting surface with a minimum finish of 63 µin (0.00016 mm) is recommended. (If it is not possible to properly prepare the test structure mounting surface, consider adhesive mounting as a possible alternative). Inspect the area, checking that there are no burrs or other foreign particles interfering with the contact surface.

STEP 2: Wipe clean the mounting surface and spread on a light film of grease, oil, or similar coupling fluid prior to installation.

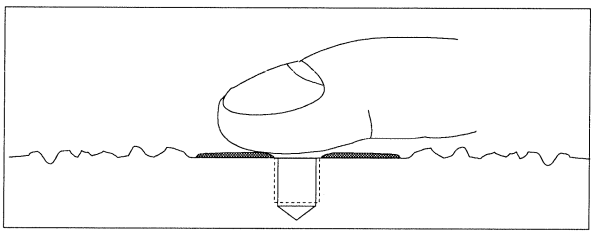

Figure 3. Mounting Surface Lubrication

Adding a coupling fluid improves vibration transmissibility by filling small voids in the mounting surface and increasing the mounting stiffness. For semi-permanent mounting, substitute epoxy or another type of adhesive.

STEP 3: Screw the mounting stud into the base of accelerometer and hand-tighten (this step is unnecessary for units having an integral mounting stud). Then, screw the sensor into the tapped hole that was prepared in the test object. Tighten the unit in place by applying, with a torque wrench, the recommended mounting torque, as listed on the enclosed **Installation Drawing**.

NOTE: *It is important to use a torque wrench during this step. Under-torquing the sensor may not adequately couple the device; over-torquing may result in stud failure.*

4.2 ADHESIVE MOUNT

Adhesive mounting is often used for temporary installation or when the test object surface cannot be adequately prepared for stud mounting. Adhesives like hot glue and wax perform well for temporary installations whereas two-part epoxies and quick-bonding gels (super glue) provide a more permanent installation. Two

techniques are used for adhesive mounting; they are via an adhesive mounting base (method 1 below) or direct adhesive mounting (method 2 below).

NOTE: *Adhesively mounted sensors often exhibit a reduction in high-frequency range. Generally, smooth surfaces and stiff adhesives provide the best high frequency response.*

METHOD 1 - Adhesive Mounting Base

This method involves attaching a base to the test structure, then securing the sensor to the base. This allows for easy removal of the accelerometer. Also, since many bases are manufactured of "hard-coated" aluminum, they provide electrical isolation to eliminate ground loops and reduce electrical interference that may propagate from the surface of the test object.

STEP 1: Prepare a smooth, flat mounting surface. A minimum surface finish of 63 µin (0.00016 mm) generally works best.

STEP 2: Stud-mount the sensor to the flat side of the appropriate adhesive mounting base according to the guidelines set forth in **STEPS 2** and **3** of the Stud Mount Procedure presented above.

STEP 3: Place a small portion of adhesive on the underside of the mounting base (the underside is discernable by the concentric grooves which are designed to accept the adhesive). Firmly press down on the assembly to displace any extra adhesive remaining under the base.

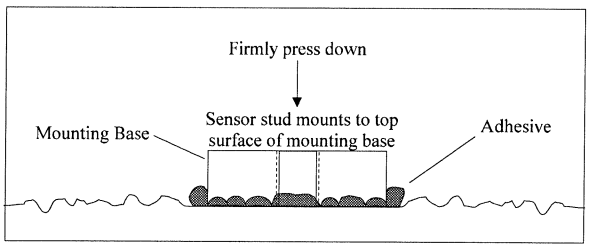

Figure 4. Mounting Base: Adhesive Installation

METHOD 2 - Direct Adhesive Mount

For restrictions of space or for convenience, most sensors can be adhesive-mounted directly to the test structure (an exception being units having integral mounting studs).

STEP 1: Prepare a smooth, flat mounting surface. A minimum surface finish of 63 µin (0.00016 mm) generally works best.

STEP 2: Place a small portion of adhesive on the underside of the sensor. Firmly press down on the top of the assembly to displace any adhesive. Be aware that excessive amounts of adhesive can make sensor removal difficult. Also, adhesive that may invade the tapped mounting hole in the base of the sensor will compromise future ability to stud mount the unit.

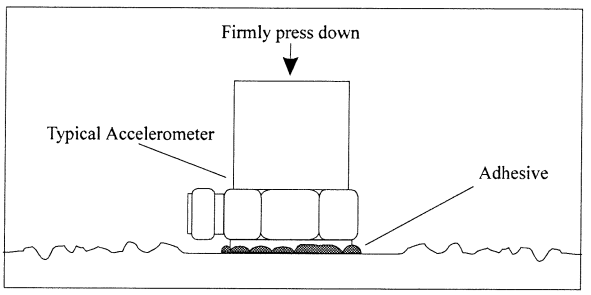

Figure 5. Direct Adhesive Mounting

4.2-1 ADHESIVE MOUNT REMOVAL (other than wax)

NOTE: *A debonder should always be used to avoid sensor damage.*

To avoid damaging the accelerometer, a debonding agent must be applied to the adhesive prior to sensor removal. With so many adhesives in use (everything from super glues, dental cement, epoxies, etc), there is no universal debonding agent available. The debonder for the Loctite 454 adhesive that PCB offers is Acetone. If you are using anything other than Loctite 454, you will have to check with the individual manufacturers for their debonding recommendations. The debonding agent must be allowed to penetrate the surface in order to properly react with the adhesive, so it is advisable to wait a few minutes before removing the sensor.

After the debonding agent has set, you can use an ordinary open-end wrench if the accelerometer has a hex base or square base, or the supplied removal tool for teardrop accelerometers. After attaching either, use a gentle shearing (or twisting) motion (by hand only) to remove the sensor from the test structure.

4.3 MAGNETIC MOUNT

Magnetic mounting provides a convenient means for making quick, portable measurements and is commonly used for machinery condition monitoring, predictive maintenance, spot checks, and vibration trending applications.

NOTE: *The correct magnet choice and an adequately prepared mounting surface are critical for obtaining reliable measurements, especially at high frequencies. Poor installations can cause as much as a 50% drop in the sensor frequency range.*

Not every magnet is suitable for all applications. For example, rare earth magnets are commonly used because

of their high strength. Flat magnets work well on smooth, flat surfaces, while dual-rail magnets are required for curved surfaces such as motor housings and pipes. In the case of non-magnetic or rough surfaces, it is recommended that the user first weld, epoxy, or otherwise adhere a steel mounting pad to the test surface. This provides a smooth location for mounting and a target to insure that subsequent measurements for trending purposes are taken at the same location.

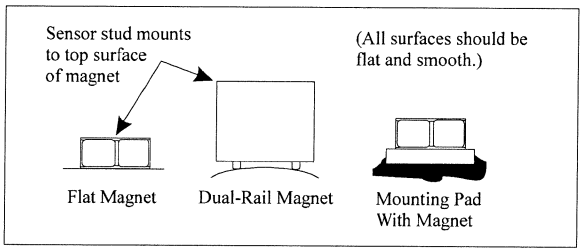

Figure 6. Magnet Types

STEP 1: Prepare a smooth, flat mounting surface. A minimum surface finish of 63 µin (0.00016 mm) generally works best. After cleaning the surface and checking for burrs, apply a light film of silicone grease, machine oil, or similar-type coupling fluid.

STEP 2: After choosing the correct magnet type, inspect the magnet, verifying that its mounting surfaces are flat and smooth.

STEP 3: Stud-mount the accelerometer to the appropriate magnet according to the guidelines set forth in **STEP 3** of the above Stud Mount Procedure.

STEP 4: To avoid damage to the sensor, install the magnet/sensor assembly to the prepared test surface by gently "rocking" or "sliding" it into place.

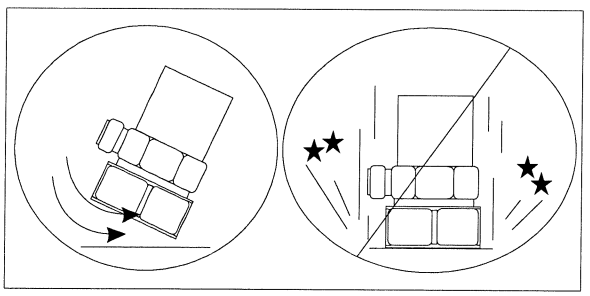

Figure 7. Magnet Mounting

CAUTION: *Magnetically mounting of an accelerometer has the potential to generate very high (and very damaging) acceleration (g) levels. To prevent such damage, exercise caution and install the assembly gently by rocking it into place. If shock is expected to be a particular concern, use a sensor with built-in shock protection. For further assistance, contact a factory representative.*

4.4 HANDHELD OR PROBE TIP MOUNT

This method is NOT recommended for most applications. Both the accuracy and repeatability at low (<5 Hz) and high frequency (>1 kHz) ranges are questionable. It is generally used only for machinery condition monitoring, when installation space is restricted, or other portable trending applications. The technique, however, can be useful for initially determining locations of greatest vibration to establish a permanent sensor installation point.

5.0 CABLING

Care and attention to cable installation and cable condition is essential as the reliability and accuracy of any measurement system is no better than that of its weakest link. Do to the nature of vibration measurements, all sensor cables will ultimately fatigue and fail. Good installation practice will extend the life of a cable, however, it is highly recommended to keep spare cables on hand to enable continuation of the test in the event of a cable failure.

STEP 1: Ascertain that you have the correct cable type.

One cable type cannot satisfy all applications. ICP® sensors can be operated with any ordinary two-wire or coaxial cable. Special, low-noise cables that are typically recommended for use with high-impedance, charge-output sensors can also be used. For applications requiring conformity to CE, low noise cables are essential. Industrial applications often require shielded, twisted-pair cables to reduce the effects of EMI and RFI that is present near electrical motors and machinery. Teflon-jacketed cabling may be necessary to withstand corrosive environments and higher temperatures. Consult the Vibration Division's product catalog for more information about cables or feel free to contact a factory representative for a specific recommendation on cables that are best suited for your application.

STEP 2: Connect the cable to the accelerometer.

A small amount of thread-locking compound placed on the connector threads prior to attachment helps secure the cable during testing. In wet, oily, or dirty environments, the connection can be sealed with silicone rubber sealant, O-rings, and flexible, heat-shrink tubing.

Coaxial Cables: Make connection by inserting the cable's connector pin into the sensor's mating socket. Then thread the connector into place by turning the cable connector's outer shell onto the accelerometer's electrical connector.

NOTE: *Do not spin the accelerometer while holding the cable connector stationary, as this will cause undue*

friction on the center pin of the cable connector and lead to premature fatigue.

Multi-pin connectors: Make connection by inserting the sensor's mating pins onto the cable connector's mating sockets. Then thread the connector into place by turning the cable connector's outer shell onto the accelerometer's electrical connector.

Pigtail Connections: Certain miniature accelerometers and shock sensors are provided with lightweight cables attached to "Pigtail" connections. This type of connection reduces overall weight and incidence of connection intermittency under shock conditions. In the event of a cable or connection failure, the cables may be repaired in the field simply by re-soldering the stripped leads to the exposed pins on the sensor. (Check the **Installation Drawing** to determine signal and ground pins). In many cases, it is also helpful to protect the solder joint with heat-shrink tubing or epoxy.

NOTE: *If you do not have the experience or resources to attach pigtail leads, consult PCB to discuss factory attachment. Damage to internal electronics may be caused by excessive heat during soldering and such failure is not covered by warranty.*

STEP 3: Route the cable to the signal conditioner, making certain to relieve stress on the sensor/cable connection. Also, minimize cable motion by securing it with tape, clamps or ties at regular intervals.

Common sense should be used to avoid physical damage and minimize electrical noise. For instance, avoid routing cables near high-voltage wires. Do not route cables along floors or walkways where they may be stepped on or become contaminated. To avoid ground loops, shielded cables should have the shield grounded at one end only, typically at the signal conditioner.

STEP 4: Finally, connect the remaining cable end to the signal conditioner. It is good practice to dissipate any electrical charge that may have accumulated in the cable by shorting the signal pin to the ground pin or shell prior to attachment.

6.0 POWERING

All ICP® sensors require constant current excitation for proper operation. For this reason, use only PCB constant-current signal conditioners or other approved constant-current sources. A typical system schematic is shown in Figure 8.

NOTE: *Damage to the built-in electronics resulting from the application of incorrect power, or the use of an unapproved power source, is NOT covered by warranty.*

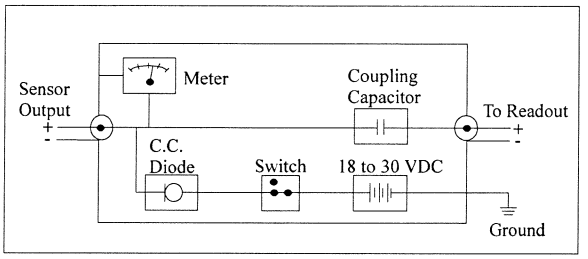

Figure 8. Typical System Schematic

The power supply consists of a current-regulated, 18 to 30 VDC source. This power is regulated by a current-limiting circuit, which provides the constant-current excitation required for proper operation of ICP® sensors. In general, battery-powered devices offer versatility for portable, low-noise measurements, whereas line-powered units provide the capability for continuous monitoring. Consult the Vibration Division's product catalog for more information about signal conditioners.

NOTE: *Under no circumstances should a voltage be supplied to an ICP® accelerometer without a current-regulating diode or equivalent electrical circuit. This may include ohmmeters, multi-meters and continuity testers.*

Meters or LEDs are used on PCB signal conditioners to monitor the bias voltage on the sensor output signal, to check sensor operation, and detect cable faults. Normally, a "yellow" reading indicates an open circuit; "green" indicates normal operation; and "red" indicates either a short or overload condition. Finally, a capacitor at the output stage of the device removes the sensor output bias voltage from the measurement signal. This provides a zero-based, AC-coupled output signal that is compatible with most standard readout devices.

NOTE: *Units having a low bias voltage may be in the "red," when actually they are working properly. If suspect, the bias voltage can be checked with a voltmeter attached to a "T" connector installed on the input connector to the signal conditioner.*

Note: *For readout devices having an input impedance near one gigohm (as encountered with some A to D converters), it may be necessary to place a one megohm resistor in parallel to the readout input to eliminate slow turn-on and signal drift.*

Today, many FFT analyzers, data acquisition modules, and data collectors have the proper constant-current excitation built-in for direct use with ICP® sensors. Before using this feature, however, check that the supply voltage and constant current are within acceptable limits for use with your particular sensor. (Check enclosed **Specification Sheet**). Please contact the respective signal

conditioner manufacturer or check the product manual for more information.

7.0 OPERATING

After completing the system setup, switch on the signal conditioner and allow 1 to 2 minutes for the system to stabilize. The meter (or LED) on the signal conditioner should be reading "green." This indicates proper operation and you may begin taking measurements. If a faulty condition is indicated (red or yellow reading), first check all system connections, then check the functionality of the cable and signal conditioner. If the system still does not operate properly, consult a PCB factory representative.

NOTE: *Always operate the accelerometer within the limitations listed on the enclosed* ***Specification Sheet****. Operating the device outside these parameters can cause temporary or permanent damage to the sensor.*

8.0 ACCELEROMETER CALIBRATION

Accelerometer calibration provides, with a definable degree of accuracy, the necessary link between the physical quantity being measured and the electrical signal generated by the sensor. In addition, other useful information concerning operational limits, physical parameters, electrical characteristics, or environmental influences may also be determined. Without this link, analyzing data becomes a nearly impossible task. Fortunately, most sensor manufacturers provide a calibration record that documents the exact characteristics of each sensor. (The type and amount of data varies depending on the manufacturer, sensor type, contractual regulations, and other special requirements).

Under normal conditions, piezoelectric sensors are extremely stable, and their calibrated performance characteristics do not change over time. However, the sensor may be temporarily or permanently affected by harsh environments influences or other unusual conditions that may cause the sensor to experience dynamic phenomena outside of its specified operating range. This change manifests itself in a variety of ways, including: a shift of the sensor resonance due to a cracked crystal; a temporary loss of low-frequency measuring capability due to a drop in insulation resistance; or total failure of the built-in microelectronic circuit due to a high mechanical shock.

For these reasons, it is recommended that a recalibration cycle be established for each accelerometer. This schedule is unique and is based on a variety of factors, such as: extent of use, environmental conditions, accuracy requirements, trend information obtained from previous calibration records, contractual regulations, frequency of "cross-checking" against other equipment, manufacturer recommendation, and any risk associated with incorrect readings. International standards, such as ISO 10012-1, provide insight and suggest methods for determining recalibration intervals for most measuring equipment. With the above information in mind and under "normal" circumstances, PCB conservatively suggests a 12- to 24-month recalibration cycle for most piezoelectric accelerometers.

NOTE: *It is good measurement practice to verify the performance of each accelerometer with a Handheld Shaker or other calibration device before and after each measurement. The PCB Handheld Shaker operates at a fixed frequency and known amplitude (1.0 g) to provide a quick check of sensor sensitivity.*

8.1 RECALIBRATION SERVICE

PCB offers recalibration services for our piezoelectric accelerometers, as well as units produced by other manufacturers. Our internal metrology laboratory is certified to ISO 9001, accredited by A2LA to ANSI/IEC 17025 and ANSI/NCSL Z540-1, complies with ISO 10012-1 (and former MIL-STD-45662A), and uses equipment directly traceable to NIST. Our investment in equipment, traceability and conformance to industry standards ensures accurate calibration against relevant specifications, in a timely fashion.

8.2 BACK-TO-BACK CALIBRATION THEORY

Many companies choose to purchase the equipment necessary to perform the recalibration procedure in house. While this may result in both a savings of time and money, it has also been attributed to incorrect readings and costly errors. Therefore, in an effort to prevent the common mistakes associated with customer-performed calibration, this document includes a broad overview of the Back-to-Back Calibration technique. This technique provides a quick and easy method for determining the sensitivity of a test accelerometer over a wide frequency range.

Back-to-Back Calibration is perhaps the most common method for determining the sensitivity of piezoelectric accelerometers. This method relies on a simple comparison to a previously calibrated accelerometer, typically referred to as a reference standard.

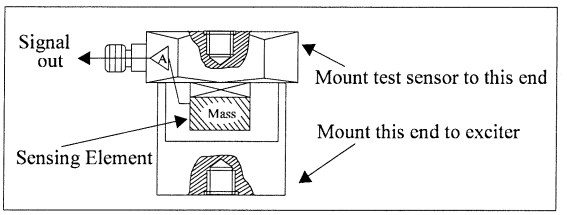

Figure 9. Reference Standard Accelerometer

These high-accuracy devices, which are directly traceable to a recognized standards laboratory, are designed for stability, as well as configured to accept a test accelerometer. By mounting a test accelerometer to the reference standard and then connecting this combination to a suitable vibration source, it is possible to vibrate both devices and compare the data as shown in Figure 10. (Test set-ups may be automated and vary, depending on the type and number of accelerometers being calibrated).

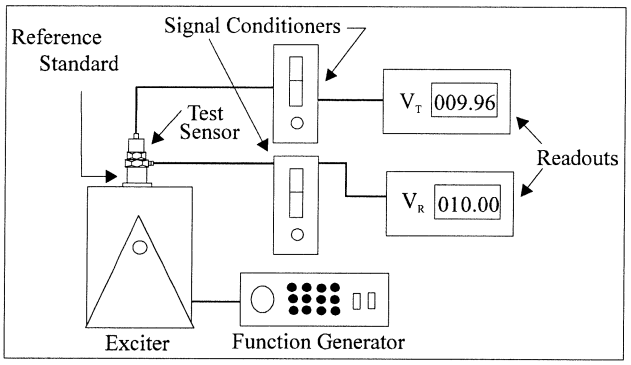

Figure 10. Typical Back-to-Back Calibration System

Because the acceleration is the same on both sensors, the ratio of their outputs (V_T/V_R) must also be the ratio of their sensitivities. With the sensitivity of the reference standard (S_R) known, the exact sensitivity of the test sensor (S_T) is easily calculated by using the following equation:

$$S_T = S_R (V_T/V_R)$$

By varying the frequency of the vibration, the sensor may be calibrated over its entire operating frequency range. The typical response of an unfiltered accelerometer is shown in Figure 11.

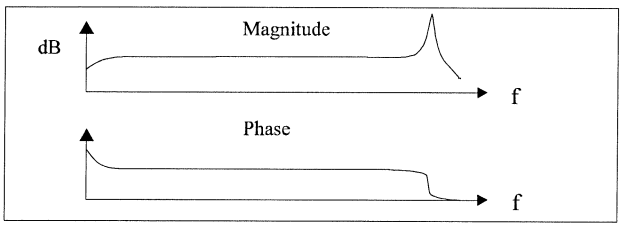

Figure 11. Typical Test Accelerometer Response

8.3 PCB CALIBRATION PROCEDURE

Numerous precautions are taken at PCB to insure accurate and repeatable results. This section provides a brief overview of the primary areas of concern.

Since the Back-to-Back Calibration technique relies on each sensor experiencing an identical acceleration level, proper mounting of the test sensor to the reference standard is imperative. Sensors with mounting holes are attached directly to the reference standard with a stud tightened to the recommended mounting torque. A shouldered mounting stud is typically used to prevent the stud from "bottoming out" in the hole. Both mounting surfaces are precision-machined and lapped to provide a smooth, flat interface according to the manufacturer's specification. A thin layer of silicone grease is placed between the mating surfaces to fill any imperfections and increase the mounting stiffness. The cables are stress-relieved by first routing them to the shaker head, then to a nearby stationary location. This reduces cable motion, which is especially important when testing charge output sensors, and helps to prevent extraneous motion or stresses from being imparted into the system. A typical set-up is shown in Figure 12.

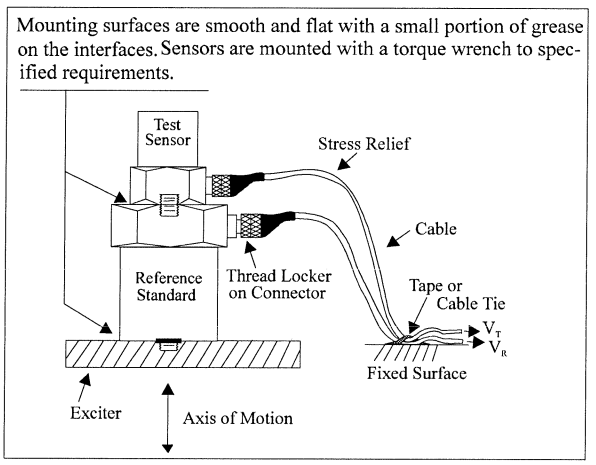

Figure 12. Typical Calibration Set-Up

Adhesively mounted sensors use similar practices. However, in this case, a small portion of quick-bonding gel, or similar temporary adhesive, is used to attach the test sensor to a reference standard designed with a smooth, flat mounting surface.

In addition to mounting, the selection of the proper equipment is critical. Some of the more important considerations include: 1) the reference standard must be specified and previously calibrated over the frequency and/or amplitude range of interest; 2) the shaker should be selected to provide minimal transverse (lateral) motion and minimal distortion; and 3) the quality of the meters, signal generator, and other devices should be selected so as to operate within the limits of permissible error.

8.4 COMMON MISTAKES

Most calibration errors are caused by simply overlooking some of the fundamental principals of dynamics. This section attempts to address some of the more common concerns.

For stud-mount sensors, always mount the accelerometer directly to the reference standard. Ensure that the mounting surfaces are smooth, flat, and free of any burrs. Always use a

coupling fluid, such as silicone grease, in the mounting interface to maintain a high mounting stiffness. Mount the sensor according to the manufacturer's recommended mounting torque. DO NOT use any intermediate mounting adaptors, as the mounted resonant frequency may be reduced, and thereby compromise the high-frequency performance. If necessary, use adaptor studs.

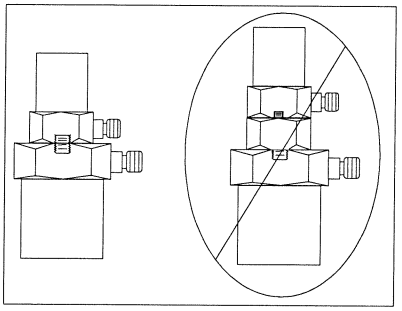

Figure 13. Stud Mounting

For adhesive mount sensors, use a thin, stiff layer of temporary adhesive such as quick-bonding gel or superglue. DO NOT use excessive amounts of glue or epoxy, as the mounting stiffness may be reduced and compromise high-frequency performance. It may also damage the sensor during removal.

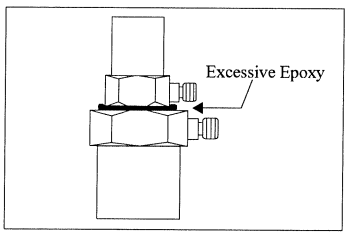

Figure 14. Incorrect Adhesive Mounting

Triaxial accelerometers should always be mounted directly to the reference standard. Unless absolutely required, DO NOT use adaptors to re-orient the sensor along the axis of motion, as the mounting stiffness may be altered. The vibration at the test sensor's sensing element may differ from the vibration at the reference standard due to a "cantilever" effect, seen in Figure 15.

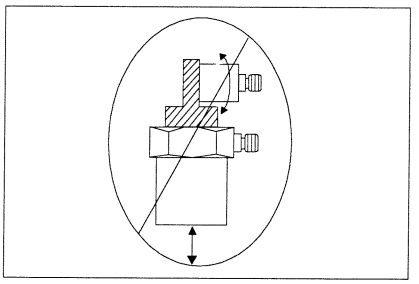

Figure 15. Mounting Triaxial Sensors (Incorrect)

Understand Back-to-Back Calibration limitations. Do not expect the uncertainty of calibration to be any better than ±2%. (In fact, the uncertainty may be as high as ±3% or ±4% for frequencies <10 Hz or >2 kHz.) Since large sensors may affect high-frequency accuracy, verify that the test sensor does not mass load the reference standard. Validate your calibration system with another accelerometer prior to each calibration session. Check with the manufacturer for exact system specifications.

8.5 CONCLUSIONS

Without an adequate understanding of dynamics, determining what, when, and how to test a sensor is a difficult task. Therefore, each user must weigh the cost, time, and risk associated with self-calibration versus utilizing the services of an accredited laboratory.

9.0 SERVICE

See the supplement sheet, contained in this manual, for information on our warranty, service, repair, and return policies and instructions.

When unexpected measurement problems arise, call our 24-hour SensorLine[SM] to discuss your immediate dynamic instrumentation needs with a factory representative.
Dial 716-684-0001.

PCB PIEZOTRONICS INC
VIBRATION DIVISION

3425 Walden Avenue, Depew, NY 14043-2495 USA **Vibration Division toll-free** 888-684-0013
24-hour SensorLine[SM] 716-684-0001 **FAX** 716-685-3886 **E-mail** vibration@pcb.com **Website** www.pcb.com

A PCB GROUP COMPANY ISO 9001 CERTIFIED A2LA ACCREDITED to ISO 17025

© 2002 PCB Group, Inc. In the interest of constant product improvement, specifications are subject to change without notice.
PCB and ICP are registered trademarks of PCB Group, Inc. SensorLine is a service mark of PCB Group, Inc.
All other trademarks are properties of their respective owners.

Manual Number: 18292
Manual Revision: B
ECN Number: 19829

VIB-ICPMANUAL-0

Printed in U.S

Model Number 356A45	TRIAXIAL ICP® ACCELEROMETER	Revision: E ECN #: 49997

Performance	ENGLISH	SI	
Sensitivity(± 10 %)	100 mV/g	10.2 mV/(m/s²)	
Measurement Range	± 50 g pk	± 490 m/s² pk	
Frequency Range(+/- 5 %)	0.7 to 7,000 Hz	0.7 to 7,000 Hz	
Frequency Range(+/- 10 %)	0.4 to 10,000 Hz	0.4 to 10,000 Hz	
Resonant Frequency	≥ 30 kHz	≥ 30 kHz	
Broadband Resolution(1 to 10,000 Hz)	0.0005 g rms	0.005 m/s² rms	[1]
Non-Linearity	≤ 1 %	≤ 1 %	[2]
Transverse Sensitivity	≤ 6 %	≤ 6 %	
TEDS Compliant(Per IEEE 1451.4)	Yes	Yes	
Environmental			
Overload Limit(Shock)	± 5,000 g pk	± 49,050 m/s² pk	
Temperature Range(Operating)	-65 to 185 °F	-54 to 85 °C	
Temperature Response	See Graph	See Graph	[1]
Base Strain Sensitivity	.001 g/με	.01 (m/s²)/με	[1]
Electrical			
Excitation Voltage	20 to 30 VDC	20 to 30 VDC	
Constant Current Excitation	2 to 20 mA	2 to 20 mA	
Output Impedance	≤ 200 Ohm	≤ 200 Ohm	
Output Bias Voltage	8 to 12 VDC	8 to 12 VDC	
Discharge Time Constant	0.8 to 2.4 sec	0.8 to 2.4 sec	
Settling Time(within 10% of bias)	≤ 5 sec	≤ 5 sec	
Spectral Noise(1 Hz)	125 μg/√Hz	1,226 (μm/sec²)/√Hz	[1]
Spectral Noise(10 Hz)	40 μg/√Hz	392 (μm/sec²)/√Hz	[1]
Spectral Noise(100 Hz)	15 μg/√Hz	147 (μm/sec²)/√Hz	[1]
Spectral Noise(1 kHz)	4 μg/√Hz	39.2 (μm/sec²)/√Hz	[1]
Physical			
Sensing Element	Ceramic	Ceramic	
Sensing Geometry	Shear	Shear	
Housing Material	Titanium	Titanium	
Sealing	Hermetic	Hermetic	
Size (Height x Length x Width)	0.40 in x 0.75 in x 0.40 in	10.2 mm x 19.1 mm x 10.2 mm	
Weight	0.15 oz	4.2 gm	[1]
Electrical Connector	1/4-28 4-Pin	1/4-28 4-Pin	
Electrical Connection Position	Side	Side	
Mounting	Adhesive	Adhesive	

CE[3]

Typical Sensitivity Deviation vs Temperature

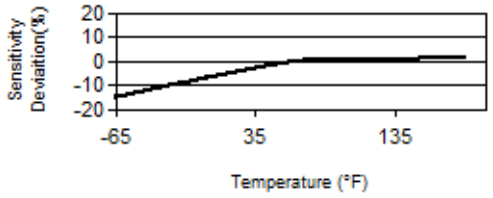

All specifications are at room temperature unless otherwise specified.
In the interest of constant product improvement, we reserve the right to change specifications without notice.
ICP® is a registered trademark of PCB Piezotronics, Inc.

OPTIONAL VERSIONS

Optional versions have identical specifications and accessories as listed for the standard model except where noted below. More than one option may be used.

J - Ground Isolated		
Electrical Isolation(Base)	≥ 10^8 Ohm	≥ 10^8 Ohm
Size - Height	0.47 in	11.8 mm
Size - Length	0.78 in	19.8 mm
Size - Width	0.47 in	11.8 mm
Weight	0.20 oz	5.7 gm

NOTES:

[1]Typical.
[2]Zero-based, least-squares, straight line method.
[3]See PCB Declaration of Conformance PS023 for details.

SUPPLIED ACCESSORIES:

Model 080A109 Petro Wax (1)
Model 080A90 Quick Bonding Gel (1)
Model ACS-1T NIST traceable triaxial amplitude response, 10 Hz to upper 5% frequency. (1)

Entered: LK	Engineer: YHK	Sales: JC	Approved: NJF	Spec Number:
Date: 01/23/2020	Date: 01/23/2020	Date: 01/23/2020	Date: 01/23/2020	49501

PCB PIEZOTRONICS
Phone: 716-684-0001
Fax: 716-684-0987
E-Mail: info@pcb.com
3425 Walden Avenue, Depew, NY 14043

PCB Piezotronics Inc. claims proprietary rights in the information disclosed hereon. Neither it nor any reproduction thereof will be disclosed to others without the written consent of PCB Piezotronics Inc.

31660

REVISIONS		
REV	DESCRIPTION	DIN
B	REMOVED "PRELIMINARY" FROM TITILE	45624

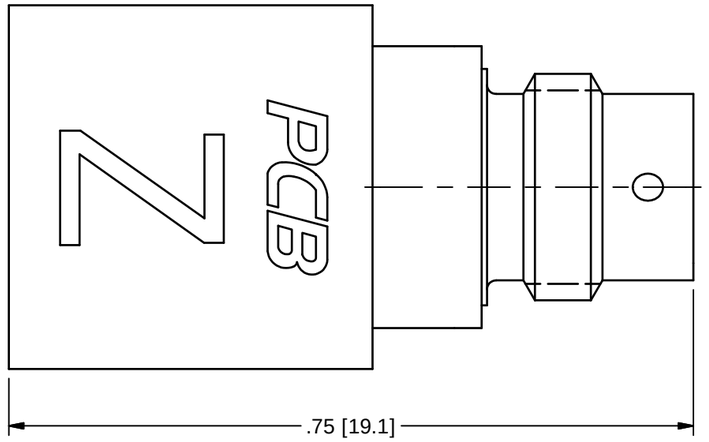

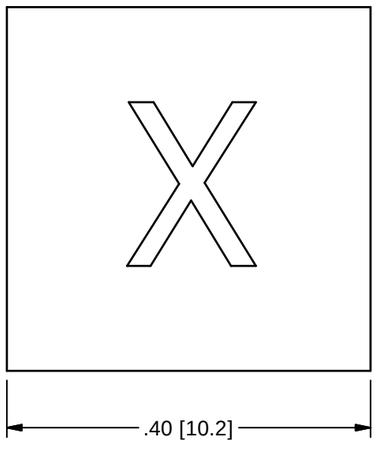

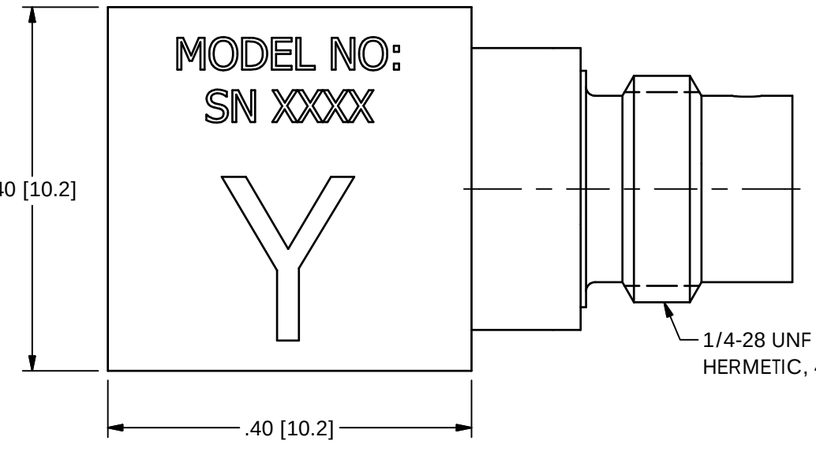

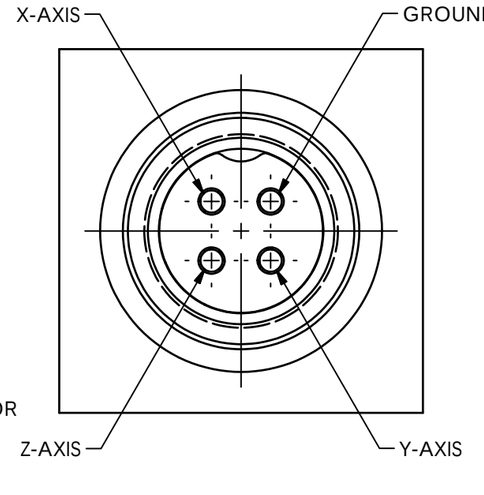

UNLESS OTHERWISE SPECIFIED TOLERANCES ARE:		DRAWN		CHECKED		ENGINEER	
DIMENSIONS IN INCHES DECIMALS XX ±.03 XXX ±.010 ANGLES ± 2 DEGREES	DIMENSIONS IN MILLIMETERS [IN BRACKETS] DECIMALS X ± 0.8 XX ± 0.25 ANGLES ± 2 DEGREES	JDM	6/29/16	ECB	6/29/16	LAB	6/29/16
FILLETS AND RADII .003 - .005	FILLETS AND RADII 0.07 - 0.13	TITLE: OUTLINE DRAWING .4IN CUBE W/1/4-28 4 PIN CONNECTOR ADHESIVE MOUNT TRIAXIAL ACCELEROMETER					

PCB PIEZOTRONICS
3425 WALDEN AVE. DEPEW, NY 14043
(716) 684-0001 E-MAIL: sales@pcb.com

CODE IDENT. NO.	DWG. NO.
52681	31660
SCALE: 4X	SHEET 1 OF 1

PCB Piezotronics Inc. claims proprietary rights in the information disclosed hereon. Neither it nor any reproduction thereof will be disclosed to others without the written consent of PCB Piezotronics Inc.

081-XXXX-90

STANDARD STUD MOUNT

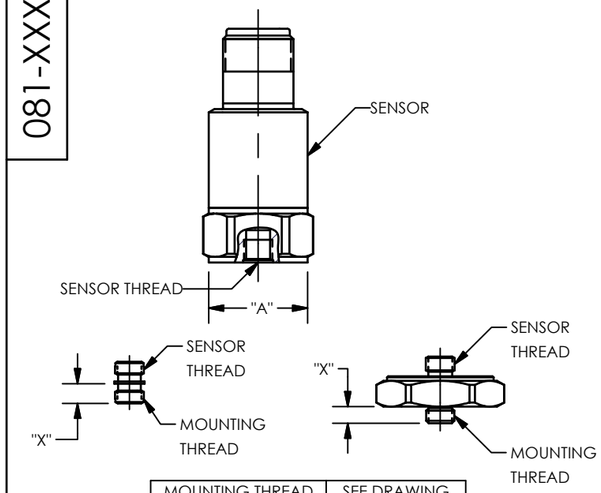

MOUNTING THREAD	SEE DRAWING
5-40	A
M3 X 0.50	B
10-32	C
M5 X 0.80	D
1/4-28	E
M6 X 1.00	F

"A" 5-40 MOUNTING INSTRUCTIONS
(METRIC DIMENSIONS IN BRACKETS)

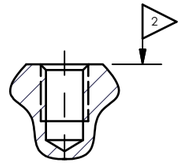

MOUNTING HOLE PREPARATION:

1 Ø.101[Ø2.57]
X .20[5.1]↧ MIN.
5-40 UNC-2B
X .15[3.8]↧ MIN.

4.) RECOMMENDED MOUNTING TORQUE,
4-5 INCH POUNDS
[45-55 NEWTON CENTIMETERS].

"B" M3 X 0.50 MOUNTING INSTRUCTIONS
(ENGLISH DIMENSIONS IN BRACKETS)

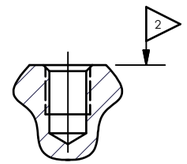

MOUNTING HOLE PREPARATION:

1 Ø2.5[Ø.099]
X 4.6 [.18]↧ MIN.
M3 X 0.50-6H
X 3.3[.13]↧ MIN.

4.) RECOMMENDED MOUNTING TORQUE,
45-55 NEWTON CENTIMETERS
[4-5 INCH POUNDS].

"C" 10-32 MOUNTING INSTRUCTIONS
(METRIC DIMENSIONS IN BRACKETS)

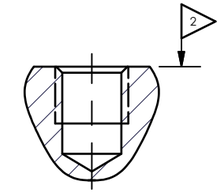

MOUNTING HOLE PREPARATION:

1 Ø.159[Ø4.04]
X .23[5.8]↧ MIN.
10-32 UNF-2B
X .15[3.8]↧ MIN.

4.) RECOMMENDED MOUNTING TORQUE,
10-20 INCH POUNDS
[113-225 NEWTON CENTIMETERS].

"D" M5 X 0.80 MOUNTING INSTRUCTIONS
(ENGLISH DIMENSIONS IN BRACKETS)

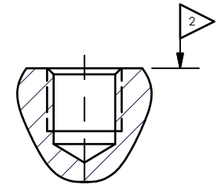

MOUNTING HOLE PREPARATION:

1 Ø4.22[Ø.166]
X 7.62 [.300]↧ MIN.
M5 X 0.8-6H
X 5.08[.200]↧ MIN.

4.) RECOMMENDED MOUNTING TORQUE,
113-225 NEWTON CENTIMETERS
[10-20 INCH POUNDS].

INTEGRAL STUD MOUNT

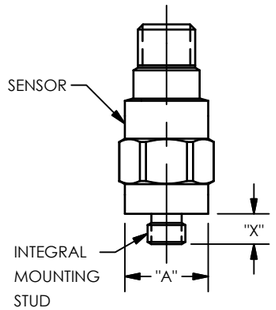

MOUNTING THREAD	SEE DRAWING
5-40	A
M3 X 0.50	B
10-32	C
M5 X 0.80	D
1/4-28	E
M6 X 1.00	F

"THRU-BOLT" STUD MOUNT

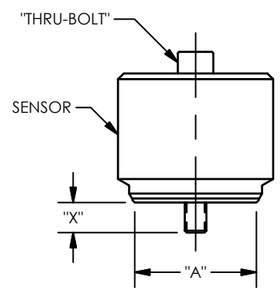

BOLT THREAD	SEE DRAWING
10-32	C
M5 X 0.80	D
1/4-28	E
M6 X 1.00	F
M8 X 1.25	F

"E" 1/4-28 MOUNTING INSTRUCTIONS
(METRIC DIMENSIONS IN BRACKETS)

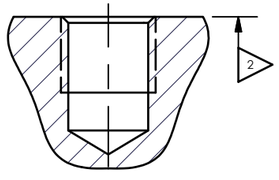

MOUNTING HOLE PREPARATION:

1 Ø.218[Ø5.54]
X .300[7.62]↧ MIN.
1/4-28 UNF-2B
X .200[5.08]↧ MIN.

4.) RECOMMENDED MOUNTING TORQUE,
2-5 FOOT POUNDS
[3-7 NEWTON METERS].

"F" M6 X 0.75, M6 X 1.00, M8 X 1.25 MOUNTING INSTRUCTIONS
(ENGLISH DIMENSIONS IN BRACKETS)

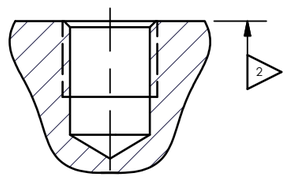

M6 X 0.75 MOUNTING HOLE PREPARATION:

1 Ø5.31[Ø.209]
X 7.62 [.300]↧ MIN.
M6 X 0.75-6H
X 5.08[.200]↧ MIN.

M6 X 1.0 MOUNTING HOLE PREPARATION:

1 Ø5.05[Ø.199]
X 8.10 [.320]↧ MIN.
M6X 1.0-6H
X 6.35[.250]↧ MIN.

M8 X 1.25 MOUNTING HOLE PREPARATION:

1 Ø6.75[Ø.266]
X 8.64 [.340]↧ MIN.
M8 X 1.25-6H
X 5.00[.197]↧ MIN.

4.) RECOMMENDED MOUNTING TORQUE,
3-7 NEWTON METERS [2-5 FT POUNDS].

"G" MOUNTING INSTRUCTIONS
FOR SPECIAL THREAD LENGTHS
(METRIC DIMENSIONS IN BRACKETS)

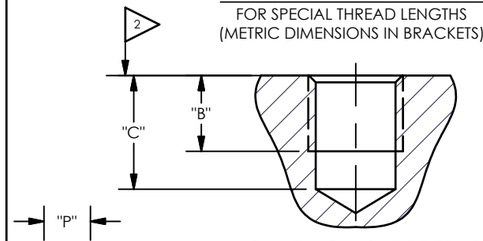

1 THREAD PITCH SHOWN

MOUNTING HOLE PREPARATION:

1 Ø DRILL DIA.
X "C"↧ MIN.
TAP
X "B"↧ MIN.

THREAD DEPTH : B= X + 1 THREAD PITCH
DRILL DEPTH : C= B + 3 THREAD PITCH
SEE A-F FOR APPROPRIATE DRILL AND TAP
THREAD PITCH= 1/TPI [P]

3.) FOR BEST RESULTS, PLACE A THIN LAYER OF SILICONE GREASE (OR EQUIVALENT) ON INTERFACE PRIOR TO MOUNTING.

2 MOUNTING SURFACE SHOULD BE FLAT TO WITHIN .001(0.03) TIR OVER DIM 'A' WITH A 63[1.61] OR BETTER FINISH FOR BEST RESULTS.

1 DRILL PERPENDICULAR TO MOUNTING SURFACE TO WITHIN ± 1°.

REVISIONS		
REV	DESCRIPTION	DIN
R	CHANGED "B" HOLE TOLERANCE	53828

UNLESS OTHERWISE SPECIFIED TOLERANCES ARE:	
DIMENSIONS IN INCHES DECIMALS XX ±.01 XXX ±.005 ANGLES ± 2 DEGREES	DIMENSIONS IN MILLIMETERS [IN BRACKETS] DECIMALS X ± 0.3 XX ± 0.13 ANGLES ± 2 DEGREES
CABLE TOLERANCES IN ENGLISH 1"≤ LENGTH < 1' = +1"/ - 0 1'≤ LENGTH < 5' = +2"/ - 0 5'≤ LENGTH < 100' = +6"/ - 0 100'≤ LENGTH = +1'/ - 0	CABLE TOLERANCES IN METRIC 2.54cm ≤ LENGTH < 30.5cm = +2.54cm/ - 0 30.5cm ≤ LENGTH < 1.5m = +5.1cm/ - 0 1.5m ≤ LENGTH < 30.5m = +15.2cm/ - 0 30.5m ≤ LENGTH = +30.5cm/ - 0
FILLETS AND RADII .003 - .005	FILLETS AND RADII 0.07 - 0.13

DRAWN		CHECKED		ENGINEER	
NJF	05/03/23	JDM	05/03/23	MJN	05/03/23

TITLE

INSTALLATION DRAWING
FOR STANDARD
081 SERIES MOUNTING

PCB PIEZOTRONICS
AN AMPHENOL COMPANY
3425 WALDEN AVE. DEPEW, NY 14043
(716) 684-0001 E-MAIL: sales@pcb.com

CODE IDENT. NO.	DWG. NO.
52681	081-XXXX-90
SCALE: NONE	SHEET 1 OF 1

Repair and Maintenance

PCB guarantees Total Customer Satisfaction through its "Lifetime Warranty Plus" on all Platinum Stock Products sold by PCB and through its limited warranties on all other PCB Stock, Standard and Special products. Due to the sophisticated nature of our sensors and associated instrumentation, **field servicing and repair is not recommended and, if attempted, will void the factory warranty**.

Beyond routine calibration and battery replacements where applicable, our products require no user maintenance. Clean electrical connectors, housings, and mounting surfaces with solutions and techniques that will not harm the material of construction. Observe caution when using liquids near devices that are not hermetically sealed. Such devices should only be wiped with a dampened cloth—never saturated or submerged.

In the event that equipment becomes damaged or ceases to operate, our Application Engineers are here to support your troubleshooting efforts 24 hours a day, 7 days a week. Call or email with model and serial number as well as a brief description of the problem.

Calibration

Routine calibration of sensors and associated instrumentation is necessary to maintain measurement accuracy. We recommend calibrating on an annual basis, after exposure to any extreme environmental influence, or prior to any critical test.

PCB Piezotronics is an ISO-9001 certified company whose calibration services are accredited by A2LA to ISO/IEC 17025, with full traceability to SI through N.I.S.T. In addition to our standard calibration services, we also offer specialized tests, including: sensitivity at elevated or cryogenic temperatures, phase response, extended high or low frequency response, extended range, leak testing, hydrostatic pressure testing, and others. For more information, contact your local PCB Piezotronics distributor, sales representative, or factory customer service representative.

Returning Equipment

If factory repair is required, our representatives will provide you with a Return Material Authorization (RMA) number, which we use to reference any information you have already provided and expedite the repair process. This number should be clearly marked on the outside of all returned package(s) and on any packing list(s) accompanying the shipment.

Contact Information

PCB Piezotronics, Inc.
3425 Walden Ave.
Depew, NY14043 USA
Toll-free: (800) 828-8840
24-hour SensorLine: (716) 684-0001
General inquiries: info@pcb.com
Repair inquiries: rma@pcb.com

For a complete list of distributors, global offices and sales representatives, visit our website, www.pcb.com.

Safety Considerations

This product is intended for use by qualified personnel who recognize shock hazards and are familiar with the precautions required to avoid injury. While our equipment is designed with user safety in mind, the protection provided by the equipment may be impaired if equipment is used in a manner not specified by this manual.

Discontinue use and contact our 24-Hour Sensorline if:

- Assistance is needed to safely operate equipment
- Damage is visible or suspected
- Equipment fails or malfunctions

For complete equipment ratings, refer to the enclosed specification sheet for your product.

Definition of Terms and Symbols

The following symbols may be used in this manual:



DANGER
Indicates an immediate hazardous situation, which, if not avoided, may result in death or serious injury.



CAUTION
Refers to hazards that could damage the instrument.



NOTE
Indicates tips, recommendations and important information. The notes simplify processes and contain additional information on particular operating steps.

The following symbols may be found on the equipment described in this manual:



This symbol on the unit indicates that high voltage may be present. Use standard safety precautions to avoid personal contact with this voltage.



This symbol on the unit indicates that the user should refer to the operating instructions located in the manual.



This symbol indicates safety, earth ground.

PCB- PCB工业监测和测量设备 - 中国RoHS 公布表

PCB Industrial Monitoring and Measuring Equipment - China RoHS Disclosure Table

部件名称 Part Name	有毒和危险品 Toxic and Hazardous Substances or Elements									
Part	铅 (Pb)	水银 (Hg)	镉 (Cd)	六价 铬 (Cr(VI)	多溴化 苯 (PBB)	多溴化二苯 醚 (PBDE)	邻苯二甲酸 二(2-乙基) 己酯 (DEHP)	邻苯二甲丁 基苄酯 (BBP)	邻苯二甲酸 二酸正丁酯 (DBP)	邻苯二甲酸 二异丁酯 (DIBP)
电气外壳 (Electrical Enclosures)	X	O	O	O	O	O	O	O	O	O
紧固件和弹簧 (Fasteners)	X	O	O	O	O	O	O	O	O	O
电缆组件 (Cable Assembly)	X	O	O	O	O	O	O	O	O	O
印刷电路板组装 (PCBAs)	X	O	O	O	O	O	O	O	O	O
机械零件(Mechanical Parts)	O	O	O	O	O	O	O	O	O	O
塑料和橡胶零件 (Plastic & Rubber Parts)	O	O	O	O	O	O	O	O	O	O
金属零件 (Metal Parts)	X	O	O	O	O	O	O	O	O	O

本表格依据 SJ/T 11364 的规定编制

O =表示该有害物质在该部件所有均质材料中的含量均在 GB/T 26572 规定的限量要求以下 (indicates that the content of the toxic and hazardous substance in all the Homogeneous Materials of the part is below the concentration limit requirement as described in GB/T 26572).

X =表示该有害物质至少在该部件的某一均质材料中的含量超出 GB/T 26572 规定的限量要求 (indicates that the content of the toxic and hazardous substance in at least one Homogeneous Material of the part exceeds the concentration limit requirement as described in GB/T 26572).