IMI SENSORS
A PCB DIVISION

Model EX685A09

Intrinsically safe, linear adjust mechanical switch, 0 to 7 g's, 0 to 100 Hz, pushbutton reset

Installation and Operating Manual

For assistance with the operation of this product,
contact the PCB Piezotronics, Inc.

Toll-free: 800-959-4464
24-hour SensorLine: 716-684-0001
Fax: 716-684-3823
E-mail: imi@pcb.com
Web: www.imi-sensors.com

Total Customer Satisfaction
IMI SENSORS
A PCB PIEZOTRONICS DIV.

IMI SENSORS
A PCB PIEZOTRONICS DIV.

SENSORS AND INSTRUMENTATION FOR MACHINE CONDITION MONITORING

Model EX685A09/685A19/29/39 Mechanical Vibration Switch

Operating Guide

3425 Walden Avenue, Depew, New York 14043-2495

Phone (716) 684-0003

Fax (716) 684-3823

Toll Free Line 1-800-959-4IMI

MANUAL NUMBER: 77919
MANUAL REVISION: NR
ECN NUMBER:

IMI SENSORS
A PCB PIEZOTRONICS DIV.

Table of Contents

Introduction ..... *Page 3*

General Features

Warning

Installation ..... *Page 4*

Internal Switches ..... *Page 4*

Remote Reset and Power On Delay ..... *Page 5-6*

Setting Up The Switch ..... *Page 6-7*

Typical Installation Locations ..... *Page 8-9*

IMI SENSORS
A PCB PIEZOTRONICS DIV.

Introduction

The Mechanical Vibration Switch is a shock sensitive mechanism for shutdown of engine or electric motor powered equipment. This switch uses a patented linear adjustment magnetic latch technology to ensure reliable operation. Pushing the reset button moves the tripping latch into a magnetically held position. A shock/vibration will move the magnet beyond this holding position, thus freeing the spring loaded tripping latch to transfer the contacts and shut down the machinery.

General Features

- Designed to Detect Shock/Vibration in 3 Planes of Motion
- Fully Adjustable, with linear adjustment technology
- Includes Magnetic Latching Feature
- Accommodates normally open (NO) and normally closed (NC) wiring schemes
- Manual Reset Button
- IP66 rated enclosure
- Remote Reset
  - EX685A19: 24VDC Remote Reset
  - EX685A29: 120VAC Remote Reset
  - EX685A39: 240VAC Remote Reset
- Top cover is secured with socket head cap screws for easy access to wiring terminals

WARNING

AC and DC input signals and power supply voltages could be hazardous.

- **DO NOT connect live wires to screw terminal plugs**
- **DO NOT insert, remove, or handle screw terminal plugs with live wires connected**
- **DO NOT make any adjustments to the setpoint with live wires present**
- **DO NOT open the unit if machine is powered or running**
- **DO NOT open the unit if the Relays are energized**
- **DO NOT open the unit if the Reset Coil is energized**
- **DO NOT make any adjustments if machine is energized and/or power is present anywhere in the switch.**

BEFORE BEGINNING INSTALLATION OF THIS IMI PRODUCT:

- ✓ Stop the machine.
- ✓ Disconnect all electrical power to the machine.
- ✓ Make sure the machine cannot operate during installation by following proper lock out tag out procedures.
- ✓ Follow all safety warnings of the machine manufacturer.
- ✓ Read and follow all installation instructions.

Installation:

ELECTRICAL

WARNING: REMOVE POWER BEFORE OPENING THE UNIT (ACCESS DOOR). STOP THE MACHINE AND DISCONNECT ALL ELECTRICAL POWER BEFORE BEGINNING THE WIRING OPERATION. IT IS YOUR RESPONSIBILITY TO HAVE A QUALIFIED PERSON INSTALL AND WIRE THE UNIT, AND MAKE SURE IT CONFORMS WITH NEC AND APPLICABLE CODES.

The vibration switch is sensitive to shock and vibration in all three planes of motion – up/down, front/back and side/side. Side/side (in the same plane as the reset pushbutton) is the most sensitive. For maximum sensitivity, mount the unit so that the side with the reset button is in-line with the direction of rotation of the machine.

The vibration switch must be firmly attached/mounted to the machine so that all mounting surfaces are in rigid contact with the mounting surface of the machine. For best results, mount the instrument in-line with the direction of rotating shafts and/or near bearings. In other words, the reset push button should be mounted pointing into the direction of shaft rotation.

CAUTION: A dust boot is provided on the reset pushbutton for all series to prevent moisture or dust intrusion. The sensitivity adjustment has an o-ring compression seal; if possible, the mounting orientation should be on a horizontal plane or with the sensitivity adjustment pointing down if possible.

1) Firmly secure the unit to the equipment using the base foot mount.

2) Make the necessary electrical connections to the vibration switch. See Internal Switches in the next section for electrical terminal locations and for typical wiring. **DO NOT EXCEED VOLTAGE OR CURRENT RATINGS OF THE CONTACTS.** Follow appropriate electrical codes/methods when making electrical connections. Be sure that the run of electrical cable is secured to the machine and is well insulated from electrical shorting. Use of conduit is recommended.

NOTE: If the electrical cable crosses a pivot point such as at the pivot of the walking beam, be sure to allow enough slack in the cable so that no stress is placed on the cable when the beam moves.

If conduit is not used for the entire length of wiring, conduit should be used from the electrical supply box to a height above ground level that prevents damage to the exposed cable from the elements, rodents, etc. or as otherwise required by applicable electrical codes. If conduit is not attached directly to the switch, use a strain relief bushing and a weatherproof cap on the exposed end of the conduit. A “drip loop” should be provided in the cable to prevent moisture from draining down the cable into the conduit should the weatherproof cap fail.

Internal Switches

The vibration switch uses 2 SPDT switch terminals with removable screws for all connections (see below). Wire the relays depending on application, either Normally Open or Normally Closed. The Normally Open and Normally Closed are referenced to the Common screw terminal connector.

WARNING: Do not exceed the maximum relay ratings as noted below.

Rated Voltage	Resistive Load	Inductive Load	Motor, Lamp Load	
			N.C	N.O
AC 125V	15A	10A	4A	2A
AC 250V	15A	10A	3A	1.5A
AC 480V	3A	2A	-	-
DC 8V	15A	15A	-	-
DC 14V	15A	10A	-	-
DC 30V	6A	5A	-	-
DC 125V	0.5A	0.05A	-	-
DC 250V	0.25A	0.03A	-	-

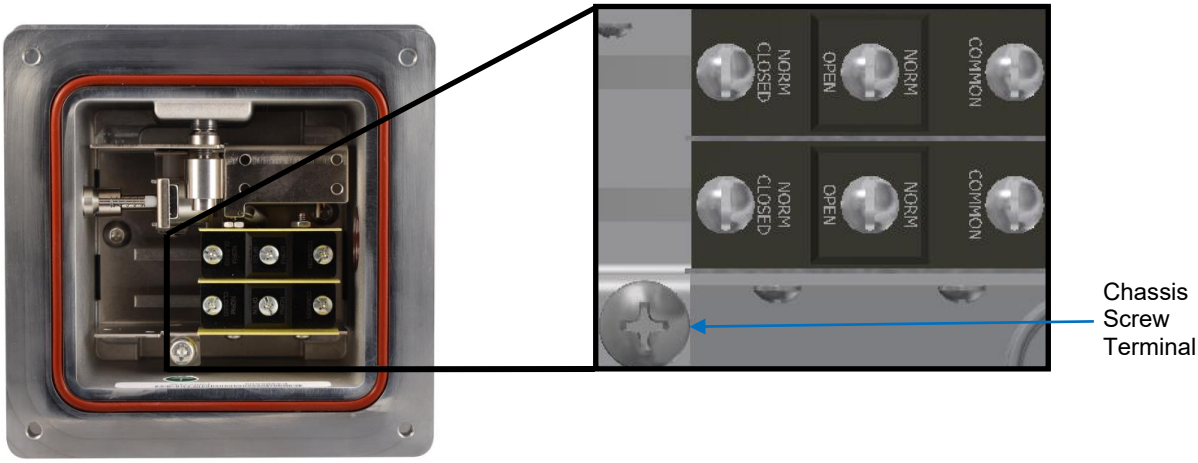

Remote Reset and Power On Delay

Models EX685A19, EX685A29 and EX685A39 have provisions to reset the switch remotely. The vibration switch can be remotely reset after being tripped by applying the correct voltage across the reset terminal as shown below.

NOTE: There is no positive/negative polarity needed for the wiring.

NOTE: While the power is applied to the remote reset terminals, the switch cannot be tripped.

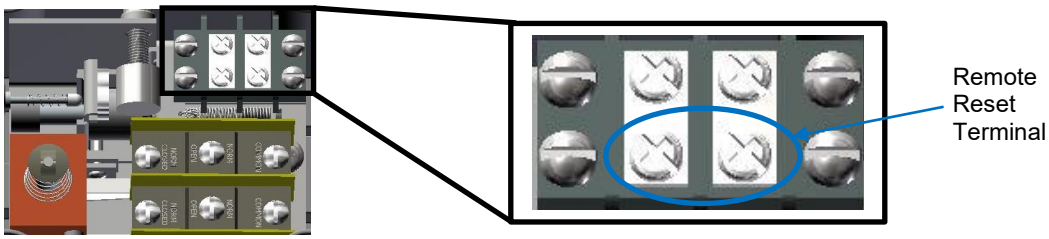

Power On Delay:

EX685A19 Only – A 24VDC power supply is needed to remotely reset the switch by energizing a solenoid. The 24VDC power source must be capable of supplying at least 2A of current. Upon power up, the unit will need the 2A to energize the remote reset coil. Depending on ambient temperature, this will decrease to approximately 0.4A after 5-10 seconds. After that time, the coil can be energized indefinitely.

To protect the remote reset solenoid from overheating, the unit has a built in thermistor that will limit the coil current after a certain amount of time. This time is dependent on ambient temperature and if the reset coil was recently energized. Since the coil needs the peak current only for a short period of time, the thermistor lowers the current but it is still strong enough to hold the switch in reset mode. **Please note that the switch will start feeling warm to the touch if the remote reset coil is left energized for more than a few minutes.**

EX685A29 Only – A 120VAC power supply is needed to remotely reset the switch by energizing a solenoid. Upon applying 120VAC to the solenoid, the unit will need 184mA to energize the remote reset coil. At standard ambient temperature, the solenoid has a 25% “on” 75% “off” cycle.

Maximum allowed On Time (remote reset energized) versus minimum Off Time (remote reset de-energized)

On Time (25%)	Off Time (75%)	Total Time (100%)
4 Minutes (Max)	12 Minutes	16 Minutes
2 Minutes	6 Minutes	8 Minutes
1 Minute	3 Minutes	4 Minutes
30 seconds	1.5 Minutes	2 Minutes

NOTE: If using the solenoid for a power on delay, do not exceed the “on” times listed. If the “on” time exceeds 4 minutes and/or the “off” time is shortened before energizing the solenoid again, the solenoid will be permanently damaged.

EX685A39 Only – A 240VAC power supply is needed to remotely reset the switch by energizing a solenoid. Upon applying 240VAC to the solenoid, the unit will need 92mA to energize the remote reset coil. At standard ambient temperature, the solenoid has a 25% “on” 75% “off” cycle.

Maximum allowed On Time (remote reset energized) versus minimum Off Time (remote reset de-energized)

On Time	Off Time	Total Time (100%)
4 Minutes (Max)	12 Minutes	16 Minutes
2 Minutes	6 Minutes	8 Minutes
1 Minute	3 Minutes	4 Minutes
30 seconds	1.5 Minutes	2 Minutes

NOTE: If using the solenoid for a power on delay, do not exceed the “on” times listed. If the “on” time exceeds 4 minutes and/or the “off” time is shortened before energizing the solenoid again, the solenoid will be permanently damaged.

Setting Up The Switch

NOTE: No live wires should be present when setting up the switch!

The EX685AX9 covers a wide range of sensitivity and needs to be adjusted specifically for the machine on which it is installed. After the switch has been installed in a satisfactory location (see last section of manual for some typical mounting locations), the sensitivity adjustment will need to be increased or decreased so that the switch does not trip during start-up or under normal operating conditions.

This is typically done as follows:

1) **REPLACE ALL COVERS, LIDS, AND ELECTRICAL ENCLOSURES.**
2) Press the reset push button (see **Figure 1, Figure 1A)** to engage the magnetic latch. Be sure that the reset button remains depressed. If it does not remain depressed, turn sensitivity adjustment screw (see **Figure 2, Figure 2A)** clockwise until it does. A large screwdriver is needed to turn the Sensitivity Adjustment Screw. Do not try to turn the Sensitivity Adjustment Screw with your fingers as this could lead to injury.

Figure 1: Reset Button

Figure 2: Sensitivity Adjustment Screw

Figure 1A: Resetting the Switch

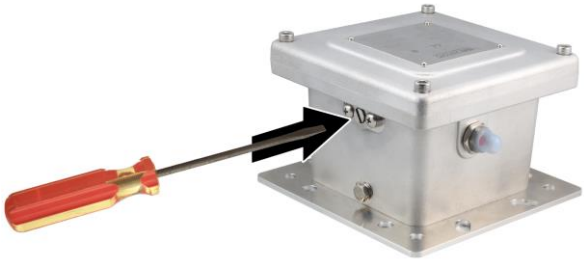

Figure 2A: Adjusting the Sensitivity

3) Start the machine.
4) If the instrument trips on start-up, allow the machine to stop. Turn the sensitivity adjustment ¼ to ½ turn clockwise (less sensitive). Depress the reset button and restart the machine. Repeat this process until the unit does not trip on start-up.
5) If the instrument does NOT trip on start-up, stop the machine. Turn the sensitivity adjustment screw ¼ to ½ turn counter-clockwise (more sensitive). Repeat the start-up/stop process until the instrument trips on start-up. Turn the sensitivity adjustment screw ¼ to ½ turn clockwise (less sensitive). Restart the machine to verify that the instrument will not trip on start-up.

Typical Installation Locations

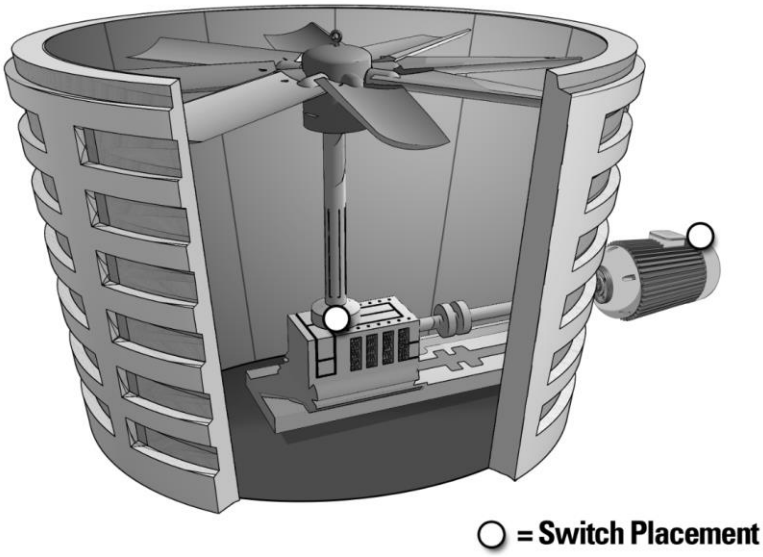

Cooling Tower Fan and Motor

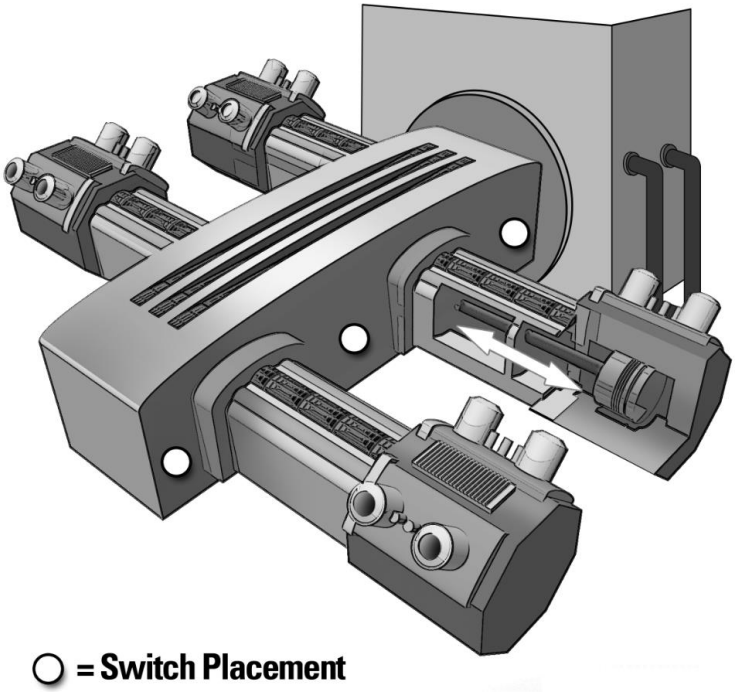

Reciprocating Compressor

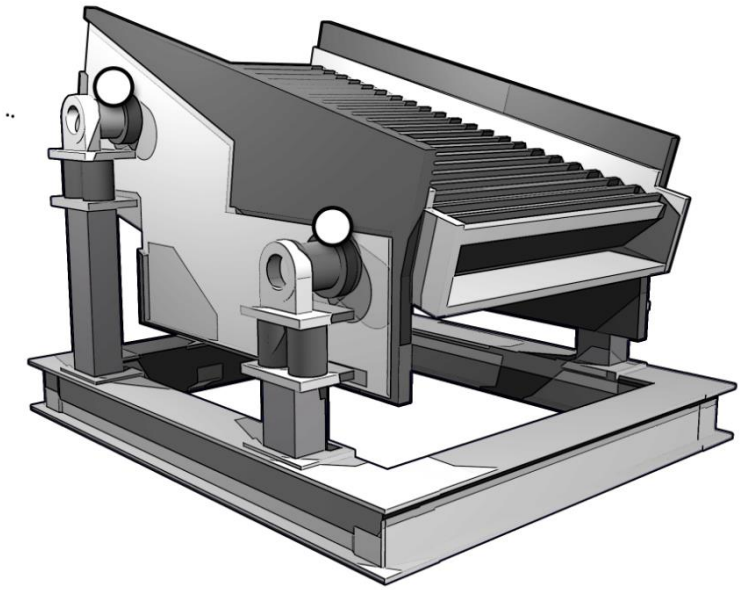

○ = Switch Placement

Vibratory Screens

Model Number EX685A09	VIBRATION SWITCH	Revision: NR ECN #: 54129

Performance	ENGLISH	SI
Measurement Range	0 to 7 g pk	0 to 68.7 m/s² pk
Frequency Range	0 to 6,000 cpm	0 to 100 Hz
Relay	3A Form C 480 VAC	3A Form C 480 VAC
Relay(Contacts)(DPDT)	Normally Open / Closed	Normally Open / Closed
Control Interface		
Reset Function	Momentary Pushbutton Switch	Momentary Pushbutton Switch
Environmental		
Temperature Range(Operating)	-4 to 140 °F	-20 to 60 °C
Hazardous Area Approval	See Manual	See Manual
Enclosure Rating	IP66	IP66
Physical		
Size (Width x Height x Depth)	6.38 in x 4.18 in x 6.38 in	162.1 mm x 106.3 mm x 162.1 mm
Weight	6.1 lb	2.7 kg
Sensing Element	Magnet	Magnet
Housing Material	Aluminum Alloy	Aluminum Alloy
Electrical Connector	Screw Terminals	Screw Terminals
Screw Terminal Wire Size	24-14 AWG	0.2 - 2.5 mm²
Cable Input	3/4-14 NPT	3/4-14 NPT
Sensing Geometry	Inertial Element	Inertial Element

CE
UK CA [1]

All specifications are at room temperature unless otherwise specified.
In the interest of constant product improvement, we reserve the right to change specifications without notice.

OPTIONAL VERSIONS

Optional versions have identical specifications and accessories as listed for the standard model except where noted below. More than one option may be used.

NOTES:

[1]See PCB Declaration of Conformance PS145 for details.

Entered: ND	Engineer: LAB	Sales: JL	Approved: NJF	Spec Number:
Date: 12/18/2023	Date: 12/18/2023	Date: 12/18/2023	Date: 12/18/2023	66340

IMI SENSORS
A PCB PIEZOTRONICS DIV.
3425 Walden Avenue, Depew, NY 14043

Phone: 800-959-4464
Fax: 716-684-3823
E-Mail: imi@pcb.com

PCB Piezotronics Inc. claims proprietary rights in the information disclosed hereon. Neither it nor any reproduction thereof will be disclosed to others without the written consent of PCB Piezotronics Inc.

77908

REVISIONS		
REV	DESCRIPTION	DIN
NR	RELEASED TO DRAFTING	54129

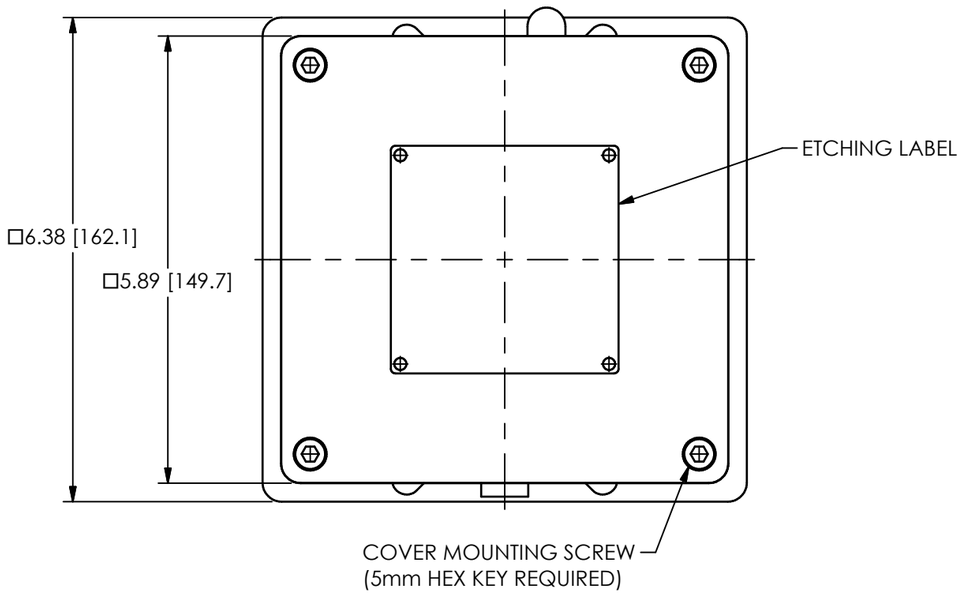

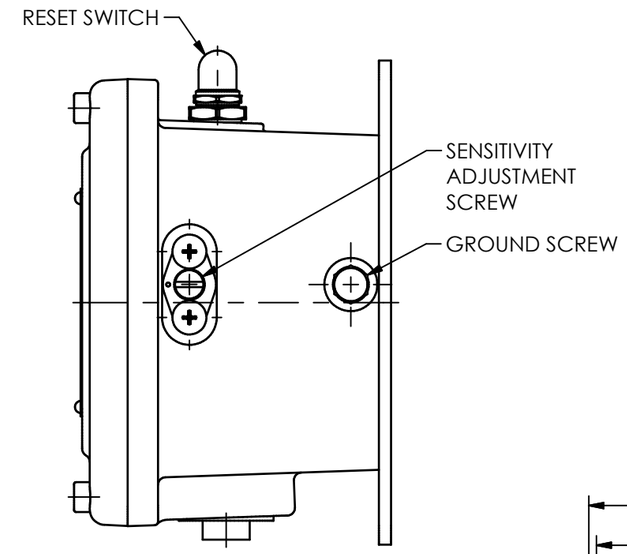

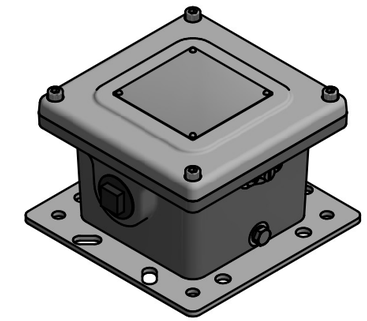

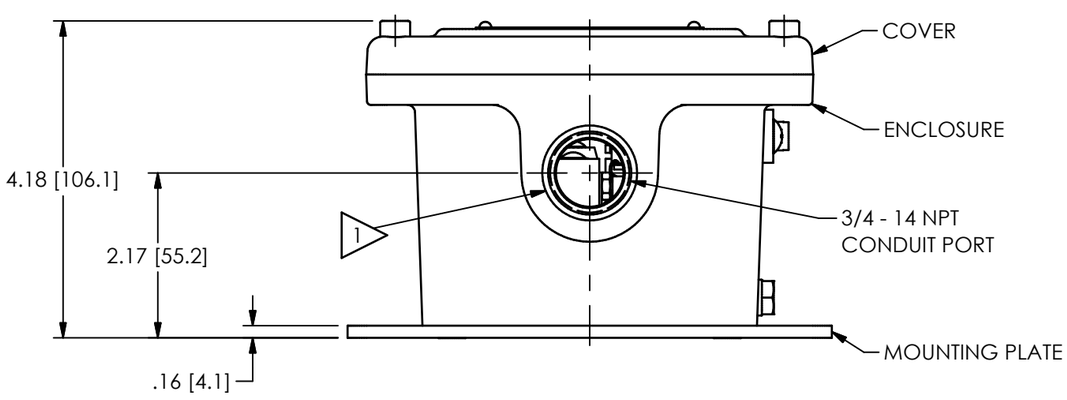

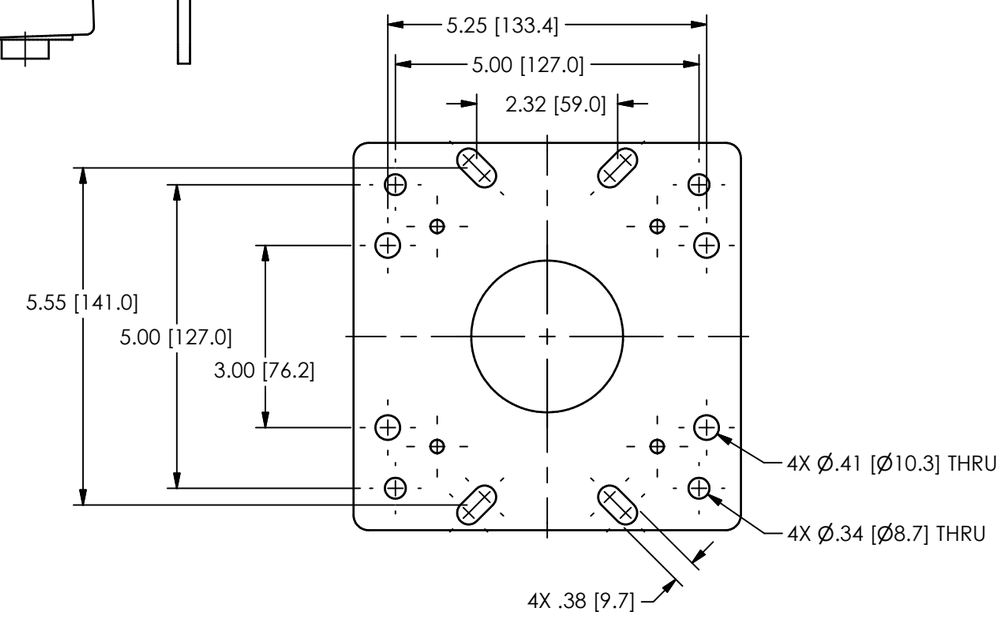

MOUNTING PLATE DETAIL
SCALE .4X

1 PLUG NOT SHOWN IN VIEW FOR CLARITY

UNLESS OTHERWISE SPECIFIED TOLERANCES ARE:	
DIMENSIONS IN INCHES DECIMALS XX ±.03 XXX ±.010 ANGLES ± 2 DEGREES	DIMENSIONS IN MILLIMETERS [IN BRACKETS] DECIMALS X ± 0.8 XX ± 0.25 ANGLES ± 2 DEGREES
CABLE TOLERANCES IN ENGLISH 1"≤ LENGTH < 1' = +1"/ - 0 1'≤ LENGTH < 5' = +2"/ - 0 5'≤ LENGTH < 100' = +6"/ - 0 100'≤ LENGTH = +1'/ - 0	CABLE TOLERANCES IN METRIC 2.54cm ≤ LENGTH < 30.5cm = +2.54cm/ - 0 30.5cm ≤ LENGTH < 1.5m = +5.1cm/ - 0 1.5m ≤ LENGTH < 30.5m = +15.2cm/ - 0 30.5m ≤ LENGTH = +30.5cm/ - 0
FILLETS AND RADII .003 - .005	FILLETS AND RADII 0.07 - 0.13

DRAWN		CHECKED		ENGINEER	
NJF	12/13/23	JDM	12/13/23	LAB	12/13/23

TITLE

OUTLINE DRAWING
MECHANICAL VIBRATION SWITCH
EX685A09, A19, A29, A39

PCB PIEZOTRONICS
AN AMPHENOL COMPANY
3425 WALDEN AVE. DEPEW, NY 14043
(716) 684-0001 E-MAIL: sales@pcb.com

CODE IDENT. NO.	SHEET	DWG. NO.
52681	B	77908
SCALE: .5X		SHEET 1 OF 1

EU Declaration of Conformity PS145

In Accordance with ISO/IEC 17050

Manufacturer:
PCB Piezotronics, Inc.
3425 Walden Avenue
Depew, New York 14043 USA

Authorized European Representative:
PCB Piezotronics Europe GmbH
Porschestrasse 20-30
41836 Hückelhoven,
Germany

Certifies that type of equipment: **Mechanical Vibration Switch**

Whose Product Models Include: **EX685Ax9 Series**

Note: "x" is a place holder for one number

For example: 685A19

These letters and numbers are included in the model numbers of the series. For details see the related data sheets.

This declaration is applicable to all Mechanical Vibration Switches of the above series which have the CE mark on their data sheets and where those data sheets refer to this Declaration of Conformity. The data sheets for all model numbers referenced above which include the CE mark on such data sheets and refer to this Declaration of Conformity are hereby incorporated by reference into this Declaration.

Conform to the following EU Directive(s) when installed per product documentation:		
	2014/30/EU	EMC Directive
	2014/34/EU	ATEX Directive
	2011/65/EU w/2015/863/EU	RoHS Directive
	2014/35/EU	Low Voltage

Standards to which Conformity is Declared:

Harmonized Standards	EN 61326-1:2013	Electrical equipment for measurement, control and laboratory use - EMC requirements - Part 1: General requirements
	EN 61326-2-3:2013	Electrical equipment for measurement, control and laboratory use - EMC requirements - Part 2-3: Particular requirements - Test configuration, operational conditions and performance criteria for transducers with integrated or remote signal conditioning
	EN 61010-1:2010, EN 61010-1:2010/A1:2019/AC:2019-04, EN 61010-1:2010/A1:2019	Safety requirements for electrical equipment for measurement, control, and laboratory use - Part 1: General requirements
	EN IEC 60079-0:2018	Explosive atmospheres - Part 0: Equipment - General requirements
	EN 60079-1:2014	Explosive atmospheres - Part 1: Equipment protection by flameproof enclosures
	EN 60079-11:2012	Intrinsic safe, i
	EN 60079-31:2014	Explosive atmospheres - Part 31: Equipment dust ignition protection by enclosure
	EN IEC 63000:2018	Technical documentation for the assessment of electrical and electronic products with respect to the restriction of hazardous substances (IEC 63000:2018)
Emissions Test Standards	EN 55011:2016, EN 55011:2016/A1:2017, EN 55011:2016/A11:2020	Industrial, scientific and medical (ISM) radio frequency equipment Electromagnetic disturbance characteristics- Limits and methods of Measurement Class B

Immunity Test Standards	EN 61000-6-1:2007 EN 61000-6-2:2005, EN 61000-6-2:2005/AC:2005	Electromagnetic compatibility (EMC) - Part 6-1: Generic standards - Immunity for residential, commercial and light-industrial environments Electromagnetic compatibility (EMC) - Part 6-2: Generic standards - Immunity for industrial environments
Other Standards Applied (non-OJEU) **Immunity Test Standards**	EN 61000-4-2:2009 EN 61000-4-3:2006+A2:2010 EN 61000-4-4:2012 EN 61000-4-5:2014 EN 61000-4-6:2014 EN 61000-4-8:2010	Electromagnetic compatibility (EMC) – Part 4–2: Testing and measuring techniques– Electrostatic discharge immunity test (ESD) Electromagnetic compatibility (EMC) - Part 4-3: Testing and measurement techniques – Radiated, radio-frequency, electromagnetic field immunity test Electromagnetic compatibility (EMC) - Part 4-4: Testing and measurement techniques – Electromagnetic compatibility (EMC) - Part 4-5: Testing and measurement techniques - Surge immunity test Electromagnetic compatibility (EMC) - Part 4-6: Testing and measurement techniques - Immunity to conducted disturbances, induced by radio-frequency fields Electromagnetic compatibility (EMC) – Part 4-8: Testing and measurement techniques – Power frequency magnetic field immunity test
Test Reports	EMC Reports Safety Reports	GM215021c GM215022s
EC Type Examination	ATEX Certification	LCIE 16 ATEX 3045 X Ex d IIB T6 Gb Ex tb IIIC T85°C Db -20°C ≤ Tamb ≤ +60°C IP66
Other International Certifications	IECEx Certifications	IECEx LCIE 16.0048X Ex d IIB T6 Gb Ex tb IIIC T85ºC Db
Notified Body Name		Laboratoire Central des Industries Electriques (0081)
Notified Body's Address		**FONTENAY-AUX-ROSES (Head Office)** 33, avenue du Général Leclerc FR- 92260 Fontenay-aux-Roses Tel. : + 33 1 40 95 60 60 Fax : + 33 1 40 95 86 56

I, the undersigned, hereby declare that the equipment specified above conforms to the above Directive(s) Standard(s)

Place: Depew, NY **Date: 11/09/2023**

Signature: Wendy Willard

Name:	Wendy Willard
Title:	Regulatory Affairs and Product Certification Specialist

UK Declaration of Conformity PS145UK

In Accordance with ISO/IEC 17050

Manufacturer:
PCB Piezotronics, Inc.
3425 Walden Avenue
Depew, New York 14043
USA

Authorized UK Representative:
PCB Piezotronics Ltd
Business and Technology Center
Bessemer Drive
Stevenage
Hertfordshire, SG1 2DX
United Kingdom

Certifies that type of equipment: **Mechanical Vibration Switch**

Whose Product Models Include: **EX685Ax9 Series**

Note: "x" is a place holder for one number

For example: 685A19

These letters and numbers are included in the model numbers of the series. For details see the related data sheets.

This declaration is applicable to all sensors of the above series, which have the UKCA mark on their data sheets and where those data sheets refer to this Declaration of Conformity. The data sheets for all model numbers referenced above, which include the UKCA mark on such data sheets and refer to this Declaration of Conformity are hereby incorporated by reference into this Declaration.

Conform to the following UK Statutory Requirements when installed per product documentation: The Restriction of the Use of Certain Hazardous Substances in Electrical and Electronic Equipment Regulations 2012 (SI2012No3032 as Amended by SI2019 No696)

Designated Standards to which Conformity is Declared:

Designated Standards	BS EN 63000:2018	Technical documentation for the assessment of electrical and electronic products with respect to the restriction of hazardous substances (IEC 63000:2018)

I, the undersigned, hereby declare that the equipment specified above conforms to the above Directive(s) Standard(s)

Place: Depew, NY **Date:** 11/09/2023

Signature: Wendy Willard

Name:	Wendy Willard
Title:	Regulatory Affairs and Product Certification Specialist

ATTESTATION D'EXAMEN UE DE TYPE
EU TYPE EXAMINATION CERTIFICATE

1 **Version : 01** **LCIE 16 ATEX 3045 X** **Issue : 01**

Directive 2014/34/UE

2 Appareil ou Système de Protection destiné à être utilisé en Atmosphères Explosibles

Directive 2014/34/EU

Equipment or Protective System Intended for use in Potentially Explosive Atmospheres

3 Produit :
Commutateur de vibration mécanique

Product :
Mechanical vibration switch

Type: EX685Ax9

4 Fabricant :

Manufacturer :
PCB Piezotronics Inc.

5 Adresse :

Address :
3425 Walden avenue
Depew, New York 14043
USA

6 Ce produit et ses variantes éventuelles acceptées sont décrits dans l'annexe de la présente attestation et dans les documents descriptifs cités en référence.

This product any acceptable variation thereto is specified in the schedule to this certificate and the documents therein referred to.

7 Le LCIE, Organisme Notifié sous la référence 0081 **conformément à l'article 17 de la directive 2014/34/UE du** Parlement européen et du Conseil du 26 février 2014, certifie que ce produit est conforme aux Exigences Essentielles de Sécurité et de Santé pour la conception et la construction de produits destinés à être utilisés en atmosphères explosibles, **données dans l'annexe II de la** Directive.
Les résultats des vérifications et essais figurent dans le(s) rapport(s) confidentiel(s) N° :

LCIE, Notified Body number 0081 in accordance with article 17 of the Directive 2014/34/EU of the European Parliament and the Council of 26 February 2014 certifies that product has been found to comply with the Essential Health and Safety Requirements relating to the design and construction of products intended for use in potentially explosive atmospheres, given in Annex II to the Directive.
The examination and test results are recorded in confidential report(s) N°:

136463-674180-01 version 01

8 Le respect des Exigences Essentielles de Sécurité et de Santé est assuré par la conformité à :

Compliance with the Essential Health and Safety Requirements has been assured by compliance with :

EN 60079-0:2012 + A11:2013
EN 60079-1:2007
EN 60079-31:2014

9 Le signe « X » lorsqu'il est placé à la suite du numéro de **l'attestation, indique que cet appareil est soumis** aux conditions **particulières d'utilisation, mentionnées dans l'annexe de cette** attestation.

If the sign "X" is placed after the certificate number, it indicates that the product is subject to the Specific Conditions of Use specified in the schedule to this certificate.

10 Cette Attestation d'Examen UE de Type concerne uniquement la conception et la construction du produit spécifié.
Des exigences supplémentaires de la directive sont applicables pour la fabrication et la fourniture du produit. Ces dernières ne sont pas couvertes par la présente attestation.

This EU Type Examination Certificate relates only to the design and construction of the specified product.
Further requirements of the Directive apply to the manufacturing process and supply of this product. These are not covered by this certificate.

11 Le marquage du produit **est mentionné dans l'annexe de cette** attestation.

The marking of the product is specified in the schedule to this certificate.

Fontenay-aux-Roses, le 8 juin 2017

Responsable de Certification
Certification Officer
Julien Gauthier

LABORATOIRE CENTRAL DES INDUSTRIES ELECTRIQUES
S.A.S au capital de 15.745.984 €
RCS Nanterre B 408 363 174
33 avenue du Général Leclerc
F - 92266 FONTENAY AUX ROSES

Seul le texte en français peut engager la responsabilité du LCIE. Ce document ne peut être reproduit que dans son intégralité, sans aucune modification. Il est établi en accord avec le référentiel de certification ATEX du LCIE. *The LCIE's liability applies only on the French text. This document may only be reproduced in its entirety and without any change. It is issued in accordance with LCIE's ATEX Certification Rules.*
CERT-ATEX-FORM 04 Rev. 02

12 DESCRIPTION DU PRODUIT

Le commutateur de vibration mécanique est un mécanisme sensible aux chocs pour l'arrêt d'un équipement.
Caractéristiques électriques de la version standard EX685A09 (sans télécommande) :

DESCRIPTION OF PRODUCT

The mechanical vibration switch is a shock sensitive mechanism for shutdown an equipment.
Electrical characteristic of the standard option EX685A09 (without remote) :

Tension nominale / *Rated voltage*	Charge resistive / *Resistive load* [A]	Charge inductive / *Inductive load* [A]
125 VAC	15	10
250 VAC	15	10
480 VAC	3	2
8 VDC	15	15
14 VDC	15	10
30 VDC	6	5
125 VDC	0.5	0.05
250 VDC	0.25	0.03

Le type EX685A09 doit être réarmé manuellement par rapport aux options avec télécommande EX685A19 (24VDC), EX685A29 (120VAC) and EX685A39 (240VAC). Tous les types fonctionnent identique selon le principe de technologie d'aimant magnétique.

The EX685A09 type has to be reset manually rather than the option with remote, EX685A19 (24VDC), EX685A29 (120VAC) and EX685A39 (240VAC). All the types function identically using magnetic latch technology.

DETAIL DE LA GAMME

RANGE DETAILS

EX685A09, EX685A19, EX685A29, EX685A39

MARQUAGE

Le marquage du produit doit comprendre :

PCB PIEZOTRONICS Inc.
Adresse : ...
Type : EX685A09, EX685A19, EX685A29 ou EX685A39
N° de fabrication : ... ; Année de fabrication : ...
Ex II 2 G D
Ex d IIB T6 Gb
Ex tb IIIC T85°C Db
-20°C ≤ T_{amb} ≤ +60°C
IP66
LCIE 16 ATEX 3045 X
AVERTISSEMENT – NE PAS OUVRIR SOUS TENSION.
AVERTISSEMENT – APRÈS MISE HORS TENSION, ATTENDRE X* MINUTES AVANT L'OUVERTURE.
ATTENTION – UTILISER DES FERMETURES AVEC RESISTANCE A LA TRACTION ≥ 450 MPA

MARKING

The marking of the product shall include the following :

PCB PIEZOTRONICS Inc.
Address:...
Type : EX685A09, EX685A19, EX685A29 or EX685A39
Serial number:... ; Year of construction: ...
Ex II 2 G D
Ex d IIB T6 Gb
Ex tb IIIC T85°C Db
-20°C ≤ T_{amb} ≤ +60°C
IP66
LCIE 16 ATEX 3045 X
WARNING – DO NOT OPEN WHEN ENERGIZED.
WARNING – AFTER DE-ENERGIZING, DELAY X* MINUTES BEFORE OPENING.
CAUTION – USE FASTENERS WITH YIELD STRESS ≥ 450 MPa

* Temps d'ouverture / Opening time (minute)	2	26
Option / *Option*	Sans télécommande / *Without remote reset*	Avec télécommande / *With remote reset*

L'appareil doit également comporter le marquage normalement prévu par les normes de construction qui le concernent sous la responsabilité du fabricant.

The equipment shall also bear the usual marking required by the product standards applying to such equipment under the manufacturer responsibility.

Seul le texte en français peut engager la responsabilité du LCIE. Ce document ne peut être reproduit que dans son intégralité, sans aucune modification. Il est établi en accord avec le référentiel de certification ATEX du LCIE. *The LCIE's liability applies only on the French text. This document may only be reproduced in its entirety and without any change. It is issued in accordance with LCIE's ATEX Certification Rules.*
CERT-ATEX-FORM 04 Rev. 02

LCIE
Laboratoire Central des Industries Electriques
Une société de Bureau Veritas
33 Avenue du Général Leclerc
92260 Fontenay-aux-Roses
FRANCE
WWW.LCIE.FR

13 CONDITIONS PARTICULIERES D'UTILISATION

a. Les réparations des joints antidéflagrants ne doivent pas être effectuées par l'utilisateur final. Dans le cas où un joint antidéflagrant doit être réparé, contactez le fabricant.

SPECIFIC CONDITIONS OF USE

Repairs of flameproof joints should not be undertaken by the end user. In the event that flameproof joint must be repaired, contact the manufacturer.

14 EXIGENCES ESSENTIELLES DE SANTE ET DE SECURITE

Couvertes par les normes listées au point 8.

ESSENTIAL HEALTH AND SAFETY REQUIREMENTS

Covered by standards listed at 8.

15 DOCUMENTS DESCRIPTIFS / DESCRIPTIVE DOCUMENTS

N°	Description	Reference	Rev.	Date	Page(s)
1.	Instructions	64027	NR	10/06/2016	4
2.	Technical file	62501	NR	10/06/2016	10

16 INFORMATIONS COMPLEMENTAIRES

Essais individuels

Néant.

Conditions de certification

Les détenteurs d'attestations d'examen UE de type doivent également satisfaire les exigences de contrôle de production telles que définies à l'article 13 de la Directive 2014/34/UE.

ADDITIONAL INFORMATIONS

Routine tests

None.

Conditions of certification

Holders of EU type examination certificates are also required to comply with the production control requirements defined in article 13 of Directive 2014/34/EU.

17 DETAILS DES MODIFICATIONS

Version 00 : Emission initiale.

Version 01: Ajout EX au type : EX685Ax9 remplace 685Ax9

DETAILS OF CHANGES

Issue 00 : Initial issue.

Issue 01 : Adding EX to Type: EX685Ax9 replaces 685Ax9

Seul le texte en français peut engager la responsabilité du LCIE. Ce document ne peut être reproduit que dans son intégralité, sans aucune modification. Il est établi en accord avec le référentiel de certification ATEX du LCIE. *The LCIE's liability applies only on the French text. This document may only be reproduced in its entirety and without any change. It is issued in accordance with LCIE's ATEX Certification Rules.*

LCIE
Laboratoire Central des Industries Electriques
Une société de Bureau Veritas

33 Avenue du Général Leclerc
92260 Fontenay-aux-Roses
FRANCE

WWW.LCIE.FR

ITE-01

ATTESTATION D'EXAMEN UE DE TYPE
EU TYPE EXAMINATION CERTIFICATE

1 **Version : 00** **LCIE 16 ATEX 3045 X** **Issue : 00**

	Directive 2014/34/UE	**Directive 2014/34/EU**
2	Appareil ou Système de Protection destiné à être utilisé en Atmosphères Explosibles	Equipment or Protective System Intended for use in Potentially Explosive Atmospheres
3	Produit : **Commutateur de vibration mécanique**	Product : **Mechanical vibration switch**

Type: 685Ax9

4	Fabricant :	Manufacturer :
	PCB Piezotronics Inc.	
5	Adresse :	Address :
	3425 Walden avenue Depew, New York 14043 USA	

6	Ce produit et ses variantes éventuelles acceptées sont décrits dans l'annexe de la présente attestation et dans les documents descriptifs cités en référence.	This product any acceptable variation thereto is specified in the schedule to this certificate and the documents therein referred to.
7	Le LCIE, Organisme Notifié sous la référence 0081 conformément à l'article 17 de la directive 2014/34/UE du Parlement européen et du Conseil du 26 février 2014, certifie que ce produit est conforme aux Exigences Essentielles de Sécurité et de Santé pour la conception et la construction de produits destinés à être utilisés en atmosphères explosibles, données dans l'annexe II de la Directive. Les résultats des vérifications et essais figurent dans le(s) rapport(s) confidentiel(s) N° :	LCIE, Notified Body number 0081 in accordance with article 17 of the Directive 2014/34/EU of the European Parliament and the Council of 26 February 2014 certifies that product has been found to comply with the Essential Health and Safety Requirements relating to the design and construction of products intended for use in potentially explosive atmospheres, given in Annex II to the Directive. The examination and test results are recorded in confidential report(s) N°:
	136463-674180-01	
8	Le respect des Exigences Essentielles de Sécurité et de Santé est assuré par la conformité à :	Compliance with the Essential Health and Safety Requirements has been assured by compliance with :
	EN 60079-0:2012 + A11:2013 EN 60079-1:2007 EN 60079-31:2014	
9	Le signe « X » lorsqu'il est placé à la suite du numéro de l'attestation, indique que cet appareil est soumis aux conditions particulières d'utilisation, mentionnées dans l'annexe de cette attestation.	If the sign "X" is placed after the certificate number, it indicates that the product is subject to the Specific Conditions of Use specified in the schedule to this certificate.
10	Cette Attestation d'Examen UE de Type concerne uniquement la conception et la construction du produit spécifié. Des exigences supplémentaires de la directive sont applicables pour la fabrication et la fourniture du produit. Ces dernières ne sont pas couvertes par la présente attestation.	This EU Type Examination Certificate relates only to the design and construction of the specified product. Further requirements of the Directive apply to the manufacturing process and supply of this product. These are not covered by this certificate.
11	Le marquage du produit est mentionné dans l'annexe de cette attestation.	The marking of the product is specified in the schedule to this certificate.

Fontenay-aux-Roses, le 13 décembre 2016

Responsable de Certification
Certification Officer
Julien Gauthier

LABORATOIRE CENTRAL DES INDUSTRIES ELECTRIQUES
S.A.S au capital de 15.745.984 €
RCS Nanterre B 408 363 174
33 avenue du Général Leclerc
F - 92266 FONTENAY AUX ROSES

Seul le texte en français peut engager la responsabilité du LCIE. Ce document ne peut être reproduit que dans son intégralité, sans aucune modification. Il est établi en accord avec le référentiel de certification ATEX du LCIE. *The LCIE's liability applies only on the French text. This document may only be reproduced in its entirety and without any change. It is issued in accordance with LCIE's ATEX Certification Rules.*

LCIE
Laboratoire Central des Industries Electriques
Une société de Bureau Veritas

33 Avenue du Général Leclerc
92260 Fontenay-aux-Roses
FRANCE

WWW.LCIE.FR

12 DESCRIPTION DU PRODUIT

Le commutateur de vibration mécanique est un mécanisme sensible aux chocs pour l'arrêt d'un équipement.
Caractéristiques électriques de la version standard 685A09 (sans télécommande) :

DESCRIPTION OF PRODUCT

The mechanical vibration switch is a shock sensitive mechanism for shutdown an equipment.
Electrical characteristic of the standard option 685A09 (without remote) :

Tension nominale / *Rated voltage*	Charge resistive / *Resistive load* [A]	Charge inductive / *Inductive load* [A]
125 VAC	15	10
250 VAC	15	10
480 VAC	3	2
8 VDC	15	15
14 VDC	15	10
30 VDC	6	5
125 VDC	0.5	0.05
250 VDC	0.25	0.03

Le type 685A09 doit être réarmé manuellement par rapport aux options avec télécommande 685A19 (24VDC), 685A29 (120VAC) and 685A39 (240VAC). Tous les types fonctionnent identique selon le principe de technologie d'aimant magnétique.

The 685A09 type has to be reset manually rather than the option with remote, 685A19 (24VDC), 685A29 (120VAC) and 685A39 (240VAC). All the types function identically using magnetic latch technology.

DETAIL DE LA GAMME / RANGE DETAILS

685A09, 685A19, 685A29, 685A39

MARQUAGE

Le marquage du produit doit comprendre :

PCB PIEZOTRONICS Inc.
Adresse : ...
Type : 685A09, 685A19, 685A29 ou 685A39
N° de fabrication : ... ; Année de fabrication : ...
Ex II 2 G D
Ex d IIB T6 Gb
Ex tb IIIC T85°C Db
-20°C ≤ T_{amb} ≤ +60°C
IP66
LCIE 16 ATEX 3045 X
AVERTISSEMENT – NE PAS OUVRIR SOUS TENSION.
AVERTISSEMENT – APRÈS MISE HORS TENSION, ATTENDRE X* MINUTES AVANT L'OUVERTURE.
ATTENTION – UTILISER DES FERMETURES AVEC RESISTANCE A LA TRACTION ≥ 450 MPA

MARKING

The marking of the product shall include the following :

PCB PIEZOTRONICS Inc.
Address:...
Type : 685A09, 685A19, 685A29 or 685A39
Serial number:... ; Year of construction: ...
Ex II 2 G D
Ex d IIB T6 Gb
Ex tb IIIC T85°C Db
-20°C ≤ T_{amb} ≤ +60°C
IP66
LCIE 16 ATEX 3045 X
WARNING – DO NOT OPEN WHEN ENERGIZED.
WARNING – AFTER DE-ENERGIZING, DELAY X* MINUTES BEFORE OPENING.
CAUTION – USE FASTENERS WITH YIELD STRESS ≥ 450 MPa

* Temps d'ouverture / Opening time (minute)	2	26
Option / *Option*	Sans télécommande / *Without remote reset*	Avec télécommande / *With remote reset*

L'appareil doit également comporter le marquage normalement prévu par les normes de construction qui le concernent sous la responsabilité du fabricant.

The equipment shall also bear the usual marking required by the product standards applying to such equipment under the manufacturer responsibility.

Seul le texte en français peut engager la responsabilité du LCIE. Ce document ne peut être reproduit que dans son intégralité, sans aucune modification. Il est établi en accord avec le référentiel de certification ATEX du LCIE. *The LCIE's liability applies only on the French text. This document may only be reproduced in its entirety and without any change. It is issued in accordance with LCIE's ATEX Certification Rules.*
CERT-ATEX-FORM 04 Rev. 02

LCIE
Laboratoire Central des Industries Electriques
Une société de Bureau Veritas
33 Avenue du Général Leclerc
92260 Fontenay-aux-Roses
FRANCE
WWW.LCIE.FR

13 CONDITIONS PARTICULIERES D'UTILISATION

a. Les réparations des joints antidéflagrants ne doivent pas être effectuées par l'utilisateur final. Dans le cas où un joint antidéflagrant doit être réparé, contactez le fabricant.

SPECIFIC CONDITIONS OF USE

Repairs of flameproof joints should not be undertaken by the end user. In the event that flameproof joint must be repaired, contact the manufacturer.

14 EXIGENCES ESSENTIELLES DE SANTE ET DE SECURITE

Couvertes par les normes listées au point 8.

ESSENTIAL HEALTH AND SAFETY REQUIREMENTS

Covered by standards listed at 8.

15 DOCUMENTS DESCRIPTIFS / DESCRIPTIVE DOCUMENTS

N°	Description	Reference	Rev.	Date	Page(s)
1.	Instructions	64027	NR	10/06/2016	4
2.	Technical file	62501	NR	10/06/2016	10

16 INFORMATIONS COMPLEMENTAIRES

Essais individuels

Néant.

Conditions de certification

Les détenteurs d'attestations d'examen UE de type doivent également satisfaire les exigences de contrôle de production telles que définies à l'article 13 de la Directive 2014/34/UE.

ADDITIONAL INFORMATIONS

Routine tests

None.

Conditions of certification

Holders of EU type examination certificates are also required to comply with the production control requirements defined in article 13 of Directive 2014/34/EU.

17 DETAILS DES MODIFICATIONS / DETAILS OF CHANGES

Version 00 : Emission initiale.

Issue 00 : Initial issue.

Seul le texte en français peut engager la responsabilité du LCIE. Ce document ne peut être reproduit que dans son intégralité, sans aucune modification. Il est établi en accord avec le référentiel de certification ATEX du LCIE. *The LCIE's liability applies only on the French text. This document may only be reproduced in its entirety and without any change. It is issued in accordance with LCIE's ATEX Certification Rules.*

LCIE
Laboratoire Central des Industries Electriques
Une société de Bureau Veritas

33 Avenue du Général Leclerc
92260 Fontenay-aux-Roses
FRANCE

WWW.LCIE.FR

Certificate of Compliance

Certificate: 70031613 (103164_0_000) **Master Contract:** 184981

Project: 70153084 **Date Issued:** 2017-11-21

Issued to: **Industrial Monitoring Instr. (IMI) A Div. of PCB Piezotronics, Inc.**
3425 Walden Ave
Depew, New York 14043
USA

Attention: Carrie Termin

The products listed below are eligible to bear the CSA Mark shown with adjacent indicators 'C' and 'US' for Canada and US or with adjacent indicator 'US' for US only or without either indicator for Canada only.

C US

Issued by: Marin Banu
Marin Banu

PRODUCTS
CLASS - C225802 - PROCESS CONTROL EQUIPMENT-For Hazardous Locations-
CLASS - C225882 - PROCESS CONTROL EQUIPMENT-For Hazardous Locations - Certified to US Standards

For details related to rating, size, configuration, etc. reference should be made to the CSA Certification Record or the descriptive report.

PRODUCTS

CLASS 2252 06 - PROCESS CONTROL EQUIPMENT
CLASS 2252 86 - PROCESS CONTROL EQUIPMENT (Certified to U.S. Standards)

Mechanical Vibration Switch, Models 685A09, 685A19 , 685A29, 685A39 and OEM model V6 with variable Part Number xxxxxxx; rated 24Vdc, 120 Vac, 50/60 Hz, 3 A & 240 Vac, 50/60 Hz 0.25 A. Intermittent Operating Conditions 25% ON and 75% OFF. Ambient Temperature 5°C to +40°C.

Notes:

1. Class I, permanently connected equipment
2. Rated: Pollution Degree 2, Overvoltage Category II.
3. Environmental Conditions: 2000 m max

CLASS 2258 02 PROCESS CONTROL EQUIPMENT - For Hazardous Locations
CLASS 2258 82 PROCESS CONTROL EQUIPMENT - For Hazardous Locations – Certified to US Standards

Ex d IIB T6 Gb
Ex tb IIIC T85°C Db IP66
Class I, Zone 1 A/Ex d IIB T6 Gb

Zone 21 AEx tb IIIC T85°C Db IP66
Class I, Div 2 Groups A, B, C, D; T6
Class II, Div 1, Groups E, F, and G

Mechanical Vibration Switch, Models EX685A09, EX685A19, EX685A29 and EX685A39; rated 24Vdc, 120 Vac, 50/60 Hz, 3 A & 240 Vac, 50/60 Hz 0.25 A. Intermittent Operating Conditions 25% ON and 75% OFF. Ambient Temperature -20°C to +60°C.

Note: Installation in Class I, Div. 2 and Class II Div. 1 shall use the same configuration as for Zone 1 and Zone 21, respectively.

APPLICABLE REQUIREMENTS

CSA C22.2 No. 61010-1-12 3rd Ed.	Safety Requirements for Electrical Equipment for Measurement, Control & Laboratory Use - Part 1: General Requirements
CAN/CSA-C22.2 No. 60079-0: 15	Explosive Atmospheres - Part 0: Equipment - General requirements (Ed 6.0)
CAN/CSA-C22.2 No. 60079-1:11	Explosive atmospheres — Part 1: Equipment protection by flameproof enclosures “d” (Ed 6.0)
CAN/CSA-C22.2 No. 60079-31: 15	Explosive atmospheres — Part 31: Equipment dust ignition protection by enclosure "t"(Ed 2.0)
CAN/CSA-C22.2 No. 60529: 2005	Degrees of Protection provided by Enclosures (IP Code) (Ed 5.0)
UL 61010-1 (3rd Ed.)	Safety Requirements for Electrical Equipment for Measurement, Control & Laboratory Use - Part 1: General Requirements
ANSI/UL 60079-0:13	Electrical Apparatus for Explosive Gas Atmospheres - Part 0: General Requirements
ANSI/ISA-60079-1 (12.22.01)-2009 (R2013)	Explosive Atmospheres - Part 1: Equipment Protection by Flameproof Enclosures “d”
ANSI/ISA-60079-31 (12.10.03)-2015	Explosive Atmospheres – Part 31: Equipment Dust Ignition Protection by Enclosure “t” (Edition 2)
ANSI/IEC 60529: 2005	Degrees of Protection provided by Enclosures (IP Code) (Ed 5.0)

MARKINGS

The manufacturer is required to apply the following markings:

- Products shall be marked with the markings specified by the particular product standard.
- Products certified for Canada shall have all Caution and Warning markings in both English and French.

Additional bilingual markings not covered by the product standard(s) may be required by the Authorities Having Jurisdiction. It is the responsibility of the manufacturer to provide and apply these additional markings, where applicable, in accordance with the requirements of those authorities.

The products listed are eligible to bear the CSA Mark shown with adjacent indicators 'C' and 'US' for Canada and US (indicating that products have been manufactured to the requirements of both Canadian and U.S. Standards) or with adjacent indicator 'US' for US only or without either indicator for Canada only.

Nameplate adhesive label material approval information: CSA approve adhesive label material used for the nameplate.

The following markings appear on the product:

1. Submittor's identification (company name and/or file number and/or registered tradename);
2. Marking on the unit that indicates the manufacturing location if the equipment is manufactured at more than one factory location. Model designation;
3. Electrical rating;
4. Date of manufacture: Month and year of manufacture or date code. If a serial number is used instead of date of manufacture, a record of serial numbers shall be kept traceable to date of manufacture. (Not related to date of sale).
5. The products listed are eligible to bear the CSA Mark shown with adjacent indicators ‘C’ and ‘US’ for Canada and US, or with adjacent indicator ‘US’ for US only, or without either indicator for Canada only:

   C US, or US, or .

Note Jurisdictions in Canada may require these markings to be also in French. It is the responsibility of the Customer to provide bilingual marking, where applicable, in accordance with the requirements of the Provincial Regulatory Authorities. It is the responsibility of the Customer to determine this requirement and have bilingual wording added to the "Markings".

Marking Method: The above markings are made via silk screening, die stamping, moulding or on CSA certified or UL recognized adhesive nameplate material, compatible with the surface used; or other equivalent permanent means that can pass the label rub test.

DOCUMENTATION

Equipment is accompanied by the following documentation.

General:

Technical specifications, instructions for use and details of where technical assistance may be obtained if required.

Equipment Ratings:

This includes equipment supply, description of I/O connections and operating environmental conditions.

1. Pollution degree 2;
2. Installation category II;
3. Altitude 2000m;
4. Electrical supply 24Vdc, 120 Vac, 240 Vac
5. Temperature 5°C to 40°C
6. Warning: Do not exceed the maximum relay ratings as noted below.

Rated Voltage	Resistive Load	Inductive Load	Motor, Lamp Load	
			N.C	N.O
AC 125V	15A	10A	4A	2A
AC 250V	15A	10A	3A	1.5A
AC 480V	3A	2A	-	-
DC 8V	15A	15A	-	-
DC 14V	15A	10A	-	-
DC 30V	6A	5A	-	-
DC 125V	0.5A	0.05A	-	-
DC 250V	0.25A	0.03A	-	-

Equipment Installation:

This includes instructions for mounting, location requirements, details for special services if any.

HAZ LOC MARKINGS:

The following markings appear:

- Company name
- Model number
- Serial number
- Electrical rating
- Haz loc rating:
- CSA Monogram with C/US indicators
- Ambient temperature range
- Caution re Explosion hazard
- WARNING – DO NOT OPEN WHEN ENERGIZED
- WARNING – A SEAL SHALL BE INSTALLED WITHIN 50 mm OF THE ENCLOSURE
- WARNING – AFTER DE-ENERGIZING, DELAY X* MINUTES BEFORE OPENING.
- CAUTION – USE FASTENERS WITH YIELD STRESS ≥ 450 MPa

* Opening time (minute)	2	26
Option	Without remote	With remote reset

Supplement to Certificate of Compliance

Certificate: 70031613 (103164_0_000) **Master Contract:** 184981

The products listed, including the latest revision described below, are eligible to be marked in accordance with the referenced Certificate.

Product Certification History

Project	Date	Description
70153084	2017-11-21	Update 70031613 to revised construction of the Model 685A Series Mechanical Vibration Switch to include Zones and Divisions for North America hazardous locations certification.
70044215	2015-09-10	Update report 70031613 to add model OEM.
70031613	2015-08-11	CSA c-us certification for Mechanical Vibration Switch, models 685M09/685M19/29/39.

IECEx Certificate of Conformity

INTERNATIONAL ELECTROTECHNICAL COMMISSION
IEC Certification Scheme for Explosive Atmospheres

for rules and details of the IECEx Scheme visit www.iecex.com

Certificate No.: IECEx LCIE 16.0048X

Issue No: 1

Certificate history:
Issue No. 1 (2017-06-08)
Issue No. 0 (2017-03-29)

Status: **Current**

Date of Issue: **2017-06-08**

Applicant: **PCB PIEZOTRONICS Inc.**
3425 Walden avenue
Depew, New York 14043
United States of America

Equipment: **Mechanical vibration switch; type EX685A09, EX685A19, EX685A29, EX685A39**

Optional accessory:

Type of Protection: **Ex d, Ex tb**

Marking:

Ex d IIB T6 Gb

Ex tb III C T85°C Db

Approved for issue on behalf of the IECEx Certification Body: Julien Gauthier

Position: Certification Officer

Signature:
(for printed version)

Date: 2017-06-08

1. This certificate and schedule may only be reproduced in full.
2. This certificate is not transferable and remains the property of the issuing body.
3. The Status and authenticity of this certificate may be verified by visiting the Official IECEx Website.

Certificate issued by:

Laboratoire Central des Industries Electriques (LCIE)
33 Avenue du General Leclerc
FR-92260 Fontenay-aux-Roses
France

IECEx Certificate of Conformity

Certificate No:	IECEx LCIE 16.0048X	Issue No: 1
Date of Issue:	**2017-06-08**	Page 2 of 4
Manufacturer:	**PCB PIEZOTRONICS Inc.** 3425 Walden avenue Depew, New York 14043 **United States of America**	

Additional Manufacturing location(s):

This certificate is issued as verification that a sample(s), representative of production, was assessed and tested and found to comply with the IEC Standard list below and that the manufacturer's quality system, relating to the Ex products covered by this certificate, was assessed and found to comply with the IECEx Quality system requirements. This certificate is granted subject to the conditions as set out in IECEx Scheme Rules, IECEx 02 and Operational Documents as amended.

STANDARDS:

The electrical apparatus and any acceptable variations to it specified in the schedule of this certificate and the identified documents, was found to comply with the following standards:

IEC 60079-0 : 2011 Edition:6.0	Explosive atmospheres - Part 0: General requirements
IEC 60079-1 : 2007-04 Edition:6	Explosive atmospheres - Part 1: Equipment protection by flameproof enclosures "d"
IEC 60079-31 : 2013 Edition:2	Explosive atmospheres - Part 31: Equipment dust ignition protection by enclosure "t"

*This Certificate **does not** indicate compliance with electrical safety and performance requirements other than those expressly included in the Standards listed above.*

TEST & ASSESSMENT REPORTS:

A sample(s) of the equipment listed has successfully met the examination and test requirements as recorded in

Test Report:

FR/LCIE/ExTR16.0075/01

Quality Assessment Report:

NL/DEK/QAR14.0004/02

IECEx Certificate of Conformity

Certificate No: IECEx LCIE 16.0048X Issue No: 1

Date of Issue: **2017-06-08** Page 3 of 4

Schedule

EQUIPMENT:

Equipment and systems covered by this certificate are as follows:

The mechanical vibration switch is a shock sensitive mechanism for shutdown an equipment. Electrical characteristic of the standard option EX685A09 (without remote) :

Rated voltage	Resistive load [A]	Inductive load [A]
125 VAC	15	10
250 VAC	15	10
480 VAC	3	2
8 VDC	15	15
14 VDC	15	10
30 VDC	6	5
125 VDC	0.5	0.05
250 VDC	0.25	0.03

The EX685A09 type has to be reset manually rather than the option with remote, EX685A19 (24VDC), EX685A29 (120VAC) and EX685A39 (240VAC). All the types function identically using magnetic latch technology.

SPECIFIC CONDITIONS OF USE: YES as shown below:

Repairs of flameproof joints should not be undertaken by the end user. In the event that flameproof joint must be repaired, contact the manufacturer.

IECEx Certificate of Conformity

Certificate No: IECEx LCIE 16.0048X

Issue No: 1

Date of Issue: **2017-06-08**

DETAILS OF CERTIFICATE CHANGES (for issues 1 and above):

Issue01:Adding EX to Type: EX685Ax9 replaces 685Ax9

Annex:

LCIE 16.0048 issue01-Annex01.pdf

FULL EQUIPMENT DESCRIPTION

The mechanical vibration switch is a shock sensitive mechanism for shutdown an equipment.
Electrical characteristic of the standard option EX685A09 (without remote) :

Rated voltage	Resistive load [A]	Inductive load [A]
125 VAC	15	10
250 VAC	15	10
480 VAC	3	2
8 VDC	15	15
14 VDC	15	10
30 VDC	6	5
125 VDC	0.5	0.05
250 VDC	0.25	0.03

The EX685A09 type has to be reset manually rather than the option with remote, EX685A19 (24VDC), EX685A29 (120VAC) and EX685A39 (240VAC). All the types function identically using magnetic latch technology.

MARKING

PCB PIEZOTRONICS Inc.
Address:...
Type : EX685A09, EX685A19, EX685A29 or EX685A39
Serial number:...
Year of construction: ...
Ex d IIB T6 Gb
Ex tb IIIC T85°C Db
-20°C ≤ T_{amb} ≤ +60°C
IECEx LCIE 16.0048X
WARNING – DO NOT OPEN WHEN ENERGIZED.
WARNING – AFTER DE-ENERGIZING, DELAY X* MINUTES BEFORE OPENING.
CAUTION – USE FASTENERS WITH YIELD STRESS ≥ 450 MPa

* Opening time (minute)	2	26
Option	Without remote reset	With remote reset

RANGE DETAILS

EX685A09, EX685A19, EX685A29, EX685A39.
For details see full equipment description in above.

RATINGS

Refer to full equipment description in above.

ROUTINE TESTS

None.

This Annex is valid only in combination with certificate mentioned above and may only be reproduced in its entirety and without any change.
CERT-ATEX-FORM 14 Rev. 01

IECEx Certificate of Conformity

INTERNATIONAL ELECTROTECHNICAL COMMISSION
IEC Certification Scheme for Explosive Atmospheres

for rules and details of the IECEx Scheme visit www.iecex.com

Certificate No.:	IECEx LCIE 16.0048X	Issue No: 0	Certificate history: Issue No. 0 (2017-03-29)
Status:	**Current**	Page 1 of 3	
Date of Issue:	**2017-03-29**		
Applicant:	**PCB PIEZOTRONICS Inc.** 3425 Walden avenue Depew, New York 14043 **United States of America**		
Equipment:	**Mechanical vibration switch; type 685A09, 685A19, 685A29, 685A39**		
Optional accessory:			
Type of Protection:	**Ex d, Ex tb**		
Marking:	Ex d IIB T6 Gb Ex tb III C T85°C Db		

Approved for issue on behalf of the IECEx Certification Body: Julien Gauthier

Position: Certification Officer

Signature:
(for printed version)

Date:

1. This certificate and schedule may only be reproduced in full.
2. This certificate is not transferable and remains the property of the issuing body.
3. The Status and authenticity of this certificate may be verified by visiting the Official IECEx Website.

Certificate issued by:

Laboratoire Central des Industries Electriques (LCIE)
33 Avenue du General Leclerc
FR-92260 Fontenay-aux-Roses
France

IECEx Certificate of Conformity

Certificate No:	IECEx LCIE 16.0048X	Issue No: 0
Date of Issue:	**2017-03-29**	Page 2 of 3
Manufacturer:	**PCB PIEZOTRONICS Inc.** 3425 Walden avenue Depew, New York 14043 **United States of America**	

Additional Manufacturing location(s):

This certificate is issued as verification that a sample(s), representative of production, was assessed and tested and found to comply with the IEC Standard list below and that the manufacturer's quality system, relating to the Ex products covered by this certificate, was assessed and found to comply with the IECEx Quality system requirements. This certificate is granted subject to the conditions as set out in IECEx Scheme Rules, IECEx 02 and Operational Documents as amended.

STANDARDS:

The electrical apparatus and any acceptable variations to it specified in the schedule of this certificate and the identified documents, was found to comply with the following standards:

IEC 60079-0 : 2011 Edition:6.0	Explosive atmospheres - Part 0: General requirements
IEC 60079-1 : 2007-04 Edition:6	Explosive atmospheres - Part 1: Equipment protection by flameproof enclosures "d"
IEC 60079-31 : 2013 Edition:2	Explosive atmospheres - Part 31: Equipment dust ignition protection by enclosure "t"

*This Certificate **does not** indicate compliance with electrical safety and performance requirements other than those expressly included in the Standards listed above.*

TEST & ASSESSMENT REPORTS:

A sample(s) of the equipment listed has successfully met the examination and test requirements as recorded in

Test Report:

FR/LCIE/ExTR16.0075/00

Quality Assessment Report:

NL/DEK/QAR14.0004/02

IECEx Certificate of Conformity

Certificate No: IECEx LCIE 16.0048X Issue No: 0

Date of Issue: **2017-03-29** Page 3 of 3

Schedule

EQUIPMENT:

Equipment and systems covered by this certificate are as follows:

The mechanical vibration switch is a shock sensitive mechanism for shutdown an equipment. Electrical characteristic of the standard option 685A09 (without remote) :

Rated voltage	Resistive load [A]	Inductive load [A]
125 VAC	15	10
250 VAC	15	10
480 VAC	3	2
8 VDC	15	15
14 VDC	15	10
30 VDC	6	5
125 VDC	0.5	0.05
250 VDC	0.25	0.03

The 685A09 type has to be reset manually rather than the option with remote, 685A19 (24VDC), 685A29 (120VAC) and 685A39 (240VAC). All the types function identically using magnetic latch technology.

SPECIFIC CONDITIONS OF USE: YES as shown below:

Repairs of flameproof joints should not be undertaken by the end user. In the event that flameproof joint must be repaired, contact the manufacturer.

Annex:

LCIE 16.0048 issue00-Annex 00.pdf

Annex 00 to Certificate
IECEx LCIE 16.0048X issue 00

FULL EQUIPMENT DESCRIPTION

The mechanical vibration switch is a shock sensitive mechanism for shutdown an equipment.
Electrical characteristic of the standard option 685A09 (without remote) :

Rated voltage	Resistive load [A]	Inductive load [A]
125 VAC	15	10
250 VAC	15	10
480 VAC	3	2
8 VDC	15	15
14 VDC	15	10
30 VDC	6	5
125 VDC	0.5	0.05
250 VDC	0.25	0.03

The 685A09 type has to be reset manually rather than the option with remote, 685A19 (24VDC), 685A29 (120VAC) and 685A39 (240VAC). All the types function identically using magnetic latch technology.

MARKING

PCB PIEZOTRONICS Inc.
Address:...
Type : 685A09, 685A19, 685A29 or 685A39
Serial number:...
Year of construction: ...
Ex d IIB T6 Gb
Ex tb IIIC T85°C Db
-20°C ≤ T_{amb} ≤ +60°C
IECEx LCIE 16.0048X
WARNING – DO NOT OPEN WHEN ENERGIZED.
WARNING – AFTER DE-ENERGIZING, DELAY X* MINUTES BEFORE OPENING.
CAUTION – USE FASTENERS WITH YIELD STRESS ≥ 450 MPa

* Opening time (minute)	2	26
Option	Without remote reset	With remote reset

RANGE DETAILS

685A09, 685A19, 685A29, 685A39.
For details see full equipment description in above.

RATINGS

Refer to full equipment description in above.

ROUTINE TESTS

None.

This Annex is valid only in combination with certificate mentioned above and may only be reproduced in its entirety and without any change.
CERT-ATEX-FORM 14 Rev. 01

Repair and Maintenance

PCB guarantees Total Customer Satisfaction through its "Lifetime Warranty Plus" on all Platinum Stock Products sold by PCB and through its limited warranties on all other PCB Stock, Standard and Special products. Due to the sophisticated nature of our sensors and associated instrumentation, **field servicing and repair is not recommended and, if attempted, will void the factory warranty**.

Beyond routine calibration and battery replacements where applicable, our products require no user maintenance. Clean electrical connectors, housings, and mounting surfaces with solutions and techniques that will not harm the material of construction. Observe caution when using liquids near devices that are not hermetically sealed. Such devices should only be wiped with a dampened cloth—never saturated or submerged.

In the event that equipment becomes damaged or ceases to operate, our Application Engineers are here to support your troubleshooting efforts 24 hours a day, 7 days a week. Call or email with model and serial number as well as a brief description of the problem.

Calibration

Routine calibration of sensors and associated instrumentation is necessary to maintain measurement accuracy. We recommend calibrating on an annual basis, after exposure to any extreme environmental influence, or prior to any critical test.

PCB Piezotronics is an ISO-9001 certified company whose calibration services are accredited by A2LA to ISO/IEC 17025, with full traceability to SI through N.I.S.T. In addition to our standard calibration services, we also offer specialized tests, including: sensitivity at elevated or cryogenic temperatures, phase response, extended high or low frequency response, extended range, leak testing, hydrostatic pressure testing, and others. For more information, contact your local PCB Piezotronics distributor, sales representative, or factory customer service representative.

Returning Equipment

If factory repair is required, our representatives will provide you with a Return Material Authorization (RMA) number, which we use to reference any information you have already provided and expedite the repair process. This number should be clearly marked on the outside of all returned package(s) and on any packing list(s) accompanying the shipment.

Contact Information

PCB Piezotronics, Inc.
3425 Walden Ave.
Depew, NY14043 USA
Toll-free: (800) 828-8840
24-hour SensorLine: (716) 684-0001
General inquiries: info@pcb.com
Repair inquiries: rma@pcb.com

For a complete list of distributors, global offices and sales representatives, visit our website, www.pcb.com.

Safety Considerations

This product is intended for use by qualified personnel who recognize shock hazards and are familiar with the precautions required to avoid injury. While our equipment is designed with user safety in mind, the protection provided by the equipment may be impaired if equipment is used in a manner not specified by this manual.

Discontinue use and contact our 24-Hour Sensorline if:

- Assistance is needed to safely operate equipment
- Damage is visible or suspected
- Equipment fails or malfunctions

For complete equipment ratings, refer to the enclosed specification sheet for your product.

Definition of Terms and Symbols

The following symbols may be used in this manual:

DANGER
Indicates an immediate hazardous situation, which, if not avoided, may result in death or serious injury.

CAUTION
Refers to hazards that could damage the instrument.

NOTE
Indicates tips, recommendations and important information. The notes simplify processes and contain additional information on particular operating steps.

The following symbols may be found on the equipment described in this manual:

This symbol on the unit indicates that high voltage may be present. Use standard safety precautions to avoid personal contact with this voltage.

This symbol on the unit indicates that the user should refer to the operating instructions located in the manual.

This symbol indicates safety, earth ground.

PCB- PCB工业监测和测量设备 - 中国RoHS 公布表

PCB Industrial Monitoring and Measuring Equipment - China RoHS Disclosure Table

部件名称 Part Name	有毒和危险品 Toxic and Hazardous Substances or Elements									
Part	铅 (Pb)	水银 (Hg)	镉 (Cd)	六价 铬 (Cr(VI)	多溴化 苯 (PBB)	多溴化二苯 醚 (PBDE)	邻苯二甲酸 二(2-乙基) 己酯 (DEHP)	邻苯二甲丁 基苄酯 (BBP)	邻苯二甲酸 二酸正丁酯 (DBP)	邻苯二甲酸 二异丁酯 (DIBP)
电气外壳 (Electrical Enclosures)	X	O	O	O	O	O	O	O	O	O
紧固件和弹簧 (Fasteners)	X	O	O	O	O	O	O	O	O	O
电缆组件 (Cable Assembly)	X	O	O	O	O	O	O	O	O	O
印刷电路板组装 (PCBAs)	X	O	O	O	O	O	O	O	O	O
机械零件(Mechanical Parts)	O	O	O	O	O	O	O	O	O	O
塑料和橡胶零件 (Plastic & Rubber Parts)	O	O	O	O	O	O	O	O	O	O
金属零件 (Metal Parts)	X	O	O	O	O	O	O	O	O	O

本表格依据 SJ/T 11364 的规定编制

O =表示该有害物质在该部件所有均质材料中的含量均在 GB/T 26572 规定的限量要求以下 (indicates that the content of the toxic and hazardous substance in all the Homogeneous Materials of the part is below the concentration limit requirement as described in GB/T 26572).

X =表示该有害物质至少在该部件的某一均质材料中的含量超出 GB/T 26572 规定的限量要求 (indicates that the content of the toxic and hazardous substance in at least one Homogeneous Material of the part exceeds the concentration limit requirement as described in GB/T 26572).