IMI SENSORS
A PCB DIVISION

Model 685A19

Linear adjust mechanical switch, 0 to 7 g's, 0 to 100 Hz, pushbutton and remote (24 VDC) reset

Installation and Operating Manual

For assistance with the operation of this product,
contact the PCB Piezotronics, Inc.

Toll-free: 800-959-4464
24-hour SensorLine: 716-684-0001
Fax: 716-684-3823
E-mail: imi@pcb.com
Web: www.imi-sensors.com

Total Customer Satisfaction
IMI SENSORS
A PCB PIEZOTRONICS DIV.

IMI SENSORS
A PCB PIEZOTRONICS DIV.

SENSORS AND INSTRUMENTATION FOR MACHINE CONDITION MONITORING

Model 685A09/685A19/29/39 Mechanical Vibration Switch

Operating Guide

3425 Walden Avenue, Depew, New York 14043-2495

Phone (716) 684-0003

Fax (716) 684-3823

Toll Free Line 1-800-959-4IMI

MANUAL NUMBER: 56534
MANUAL REVISION: A
ECN NUMBER: 43636

Table of Contents

Introduction ..... *Page 3*

General Features

Warning

Installation ..... *Page 4*

Internal Switches ..... *Page 4*

Remote Reset and Power On Delay ..... *Page 5-6*

Setting Up The Switch ..... *Page 6-7*

Typical Installation Locations ..... *Page 8-9*

Introduction

The Mechanical Vibration Switch is a shock sensitive mechanism for shutdown of engine or electric motor powered equipment. This switch uses a patent pending linear adjustment magnetic latch technology to ensure reliable operation. Pushing the reset button moves the tripping latch into a magnetically held position. A shock/vibration will move the magnet beyond this holding position, thus freeing the spring loaded tripping latch to transfer the contacts and shut down the machinery.

General Features

- Designed to Detect Shock/Vibration in 3 Planes of Motion
- Fully Adjustable, with patent pending linear adjustment technology
- Includes Magnetic Latching Feature
- Accommodates normally open (NO) and normally closed (NC) wiring schemes
- Manual Reset Button
- IP66 rated enclosure
- Remote Reset
  - 685A19: 24VDC Remote Reset
  - 685A29: 120VAC Remote Reset
  - 685A39: 240VAC Remote Reset
- Top cover is secured with socket head cap screws for easy access to wiring terminals

WARNING

AC and DC input signals and power supply voltages could be hazardous.

- **DO NOT connect live wires to screw terminal plugs**
- **DO NOT insert, remove, or handle screw terminal plugs with live wires connected**
- **DO NOT make any adjustments to the setpoint with live wires present**
- **DO NOT open the unit if machine is powered or running**
- **DO NOT open the unit if the Relays are energized**
- **DO NOT open the unit if the Reset Coil is energized**
- **DO NOT make any adjustments if machine is energized and/or power is present anywhere in the switch.**

BEFORE BEGINNING INSTALLATION OF THIS IMI PRODUCT:

- ✓ Stop the machine.
- ✓ Disconnect all electrical power to the machine.
- ✓ Make sure the machine cannot operate during installation by following proper lock out tag out procedures.
- ✓ Follow all safety warnings of the machine manufacturer.
- ✓ Read and follow all installation instructions.

Installation:

ELECTRICAL

WARNING: REMOVE POWER BEFORE OPENING THE UNIT (ACCESS DOOR). STOP THE MACHINE AND DISCONNECT ALL ELECTRICAL POWER BEFORE BEGINNING THE WIRING OPERATION. IT IS YOUR RESPONSIBILITY TO HAVE A QUALIFIED PERSON INSTALL AND WIRE THE UNIT, AND MAKE SURE IT CONFORMS WITH NEC AND APPLICABLE CODES.

The vibration switch is sensitive to shock and vibration in all three planes of motion – up/down, front/back and side/side. Side/side (in the same plane as the reset pushbutton) is the most sensitive. For maximum sensitivity, mount the unit so that the side with the reset button is in-line with the direction of rotation of the machine.

The vibration switch must be firmly attached/mounted to the machine so that all mounting surfaces are in rigid contact with the mounting surface of the machine. For best results, mount the instrument in-line with the direction of rotating shafts and/or near bearings. In other words, the reset push button should be mounted pointing into the direction of shaft rotation. It may be necessary to provide a mounting plate or bracket to attach the 685Ax9 to the machine. The mounting bracket should be thick enough to prevent induced acceleration/vibration upon the 685x9. Typically 1/2 in. (13mm) thick plate is sufficient.

CAUTION: A dust boot is provided on the reset pushbutton for all series to prevent moisture or dust intrusion. The sensitivity adjustment has an o-ring compression seal; if possible, the mounting orientation should be on a horizontal plane or with the sensitivity adjustment pointing down if possible.

1) Firmly secure the unit to the equipment using the base foot mount.

2) Make the necessary electrical connections to the vibration switch. See Internal Switches in the next section for electrical terminal locations and for typical wiring. **DO NOT EXCEED VOLTAGE OR CURRENT RATINGS OF THE CONTACTS.** Follow appropriate electrical codes/methods when making electrical connections. Be sure that the run of electrical cable is secured to the machine and is well insulated from electrical shorting. Use of conduit is recommended.

NOTE: If the electrical cable crosses a pivot point such as at the pivot of the walking beam, be sure to allow enough slack in the cable so that no stress is placed on the cable when the beam moves.

If conduit is not used for the entire length of wiring, conduit should be used from the electrical supply box to a height above ground level that prevents damage to the exposed cable from the elements, rodents, etc. or as otherwise required by applicable electrical codes. If conduit is not attached directly to the switch, use a strain relief bushing and a weatherproof cap on the exposed end of the conduit. A “drip loop” should be provided in the cable to prevent moisture from draining down the cable into the conduit should the weatherproof cap fail.

Internal Switches

The vibration switch uses 2 SPDT switch terminals with removable screws for all connections (see below). Wire the relays depending on application, either Normally Open or Normally Closed. The Normally Open and Normally Closed are referenced to the Common screw terminal connector.

WARNING: Do not exceed the maximum relay ratings as noted below.

Rated Voltage	Resistive Load	Inductive Load	Motor, Lamp Load	
			N.C	N.O
AC 125V	15A	10A	4A	2A
AC 250V	15A	10A	3A	1.5A
AC 480V	3A	2A	-	-
DC 8V	15A	15A	-	-
DC 14V	15A	10A	-	-
DC 30V	6A	5A	-	-
DC 125V	0.5A	0.05A	-	-
DC 250V	0.25A	0.03A	-	-

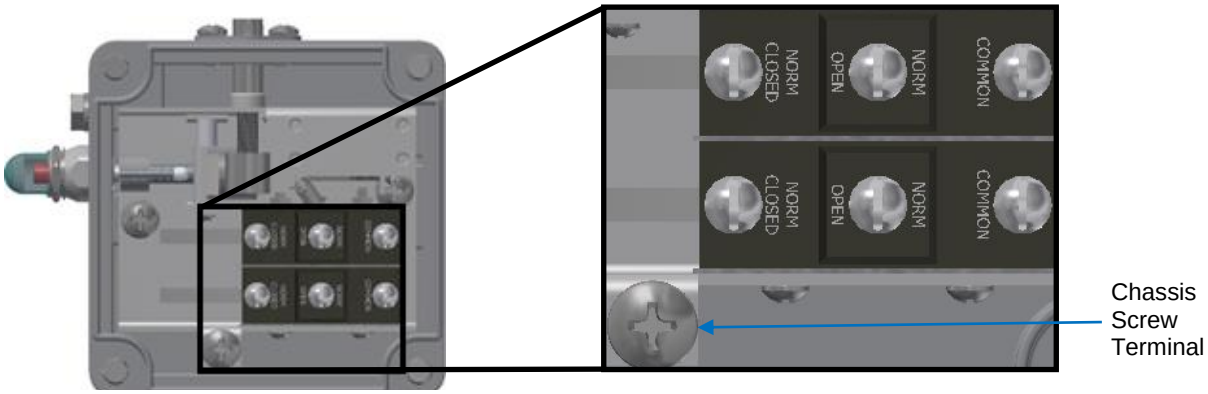

Remote Reset and Power On Delay

Models 685A19, 685A29 and 685A39 have provisions to reset the switch remotely. The vibration switch can be remotely reset after being tripped by applying the correct voltage across the reset terminal as shown below.
NOTE: There is no positive/negative polarity needed for the wiring.
NOTE: While the power is applied to the remote reset terminals, the switch cannot be tripped.

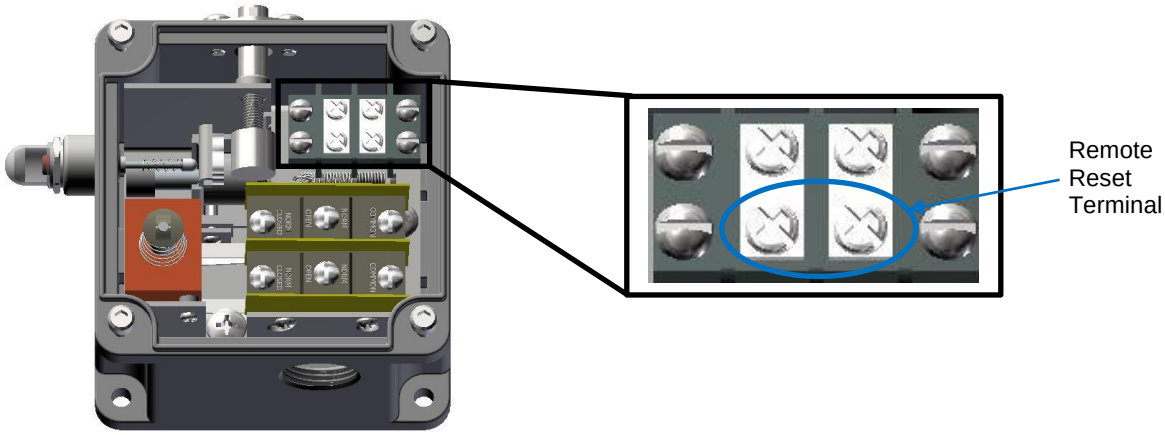

Power On Delay:

685A19 Only – A 24VDC power supply is needed to remotely reset the switch by energizing a solenoid. The 24VDC power source must be capable of supplying at least 2A of current. Upon power up, the unit will need the 2A to energize the remote reset coil. Depending on ambient temperature, this will decrease to approximately 0.4A after 5-10 seconds. After that time, the coil can be energized indefinitely.
To protect the remote reset solenoid from overheating, the unit has a built in thermistor that will limit the coil current after a certain amount of time. This time is dependent on ambient temperature and if the reset coil was recently energized. Since the coil needs the peak current only for a short period of time, the thermistor lowers the current but it is still strong enough to hold the switch in reset mode. **Please note that the switch will start feeling warm to the touch if the remote reset coil is left energized for more than a few minutes.**

685A29 Only – A 120VAC power supply is needed to remotely reset the switch by energizing a solenoid. Upon applying 120VAC to the solenoid, the unit will need 184mA to energize the remote reset coil. At standard ambient temperature, the solenoid has a 25% "on" 75% "off" cycle.

Maximum allowed On Time (remote reset energized) versus minimum Off Time (remote reset de-energized)

On Time (25%)	Off Time (75%)	Total Time (100%)
4 Minutes (Max)	12 Minutes	16 Minutes
2 Minutes	6 Minutes	8 Minutes
1 Minute	3 Minutes	4 Minutes
30 seconds	1.5 Minutes	2 Minutes

NOTE: If using the solenoid for a power on delay, do not exceed the "on" times listed. If the "on" time exceeds 4 minutes and/or the "off" time is shortened before energizing the solenoid again, the solenoid will be permanently damaged.

685A39 Only – A 240VAC power supply is needed to remotely reset the switch by energizing a solenoid. Upon applying 240VAC to the solenoid, the unit will need 92mA to energize the remote reset coil. At standard ambient temperature, the solenoid has a 25% "on" 75% "off" cycle.

Maximum allowed On Time (remote reset energized) versus minimum Off Time (remote reset de-energized)

On Time	Off Time	Total Time (100%)
4 Minutes (Max)	12 Minutes	16 Minutes
2 Minutes	6 Minutes	8 Minutes
1 Minute	3 Minutes	4 Minutes
30 seconds	1.5 Minutes	2 Minutes

NOTE: If using the solenoid for a power on delay, do not exceed the "on" times listed. If the "on" time exceeds 4 minutes and/or the "off" time is shortened before energizing the solenoid again, the solenoid will be permanently damaged.

Setting Up The Switch

The 685AX9 covers a wide range of sensitivity and needs to be adjusted specifically for the machine on which it is installed. After the switch has been installed in a satisfactory location (see last section of manual for some typical mounting locations), the sensitivity adjustment will need to be increased or decreased so that the switch does not trip during start-up or under normal operating conditions.

NOTE: If using a remote reset model (eg: 685A19/685A29/685A39), the minimum sensitivity setting for the remote reset to work properly is 1 turn clockwise. That is, with no motion, if turning the Sensitivity adjustment screw counterclockwise until the magnet disengages, for the remote reset to work properly, the minimum setting is 1 turn clockwise from that location.

This is typically done as follows:

1) **REPLACE ALL COVERS, LIDS, AND ELECTRICAL ENCLOSURES.**
2) Press the reset push button (see **Figure 1, Figure 1A**) to engage the magnetic latch. Be sure that the reset button remains depressed. If it does not remain depressed, turn sensitivity adjustment screw (see **Figure 2, Figure 2A**) clockwise until it does. A large screwdriver is needed to turn the Sensitivity Adjustment Screw. Do not try to turn the Sensitivity Adjustment Screw with your fingers as this could lead to injury.

Figure 1: Reset Button

Figure 2: Sensitivity Adjustment Screw

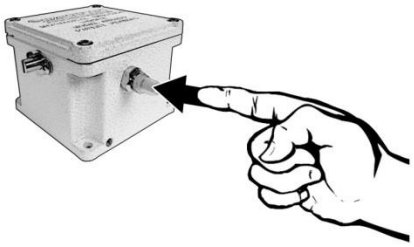

Figure 2A: Resetting the Switch

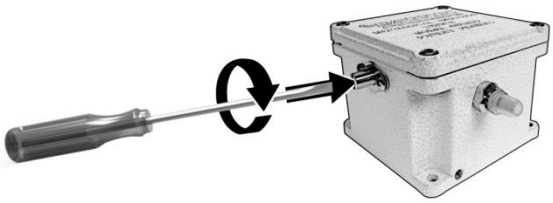

Figure 2A: Adjusting the Sensitivity

3) Start the machine.
4) If the instrument trips on start-up, allow the machine to stop. Turn the sensitivity adjustment ¼ to ½ turn clockwise. Depress the reset button and restart the machine. Repeat this process until the unit does not trip on start-up.
5) If the instrument does NOT trip on start-up, stop the machine. Turn the sensitivity adjustment screw ¼ to ½ turn counter-clockwise. Repeat the start-up/stop process until the instrument trips on start-up. Turn the sensitivity adjustment screw ¼ to ½ turn clockwise (less sensitive). Restart the machine to verify that the instrument will not trip on start-up.
6) Verify that the unit will trip when abnormal shock/vibration exists.

Typical Installation Locations

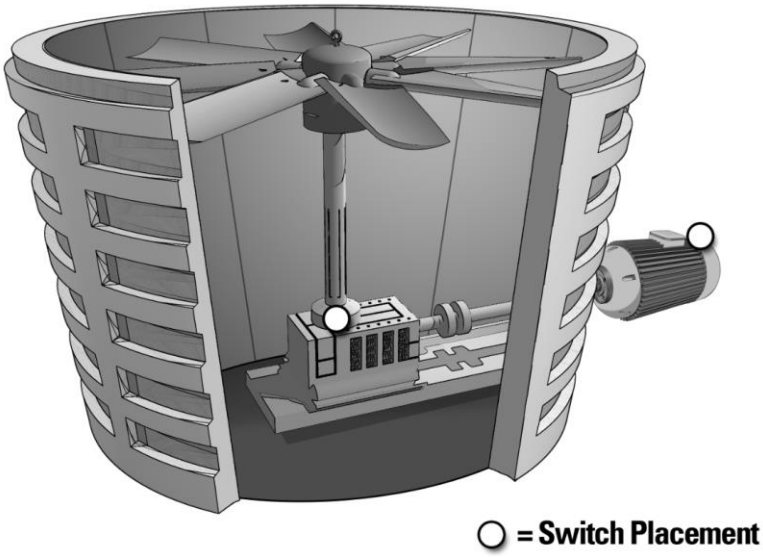

Cooling Tower Fan and Motor

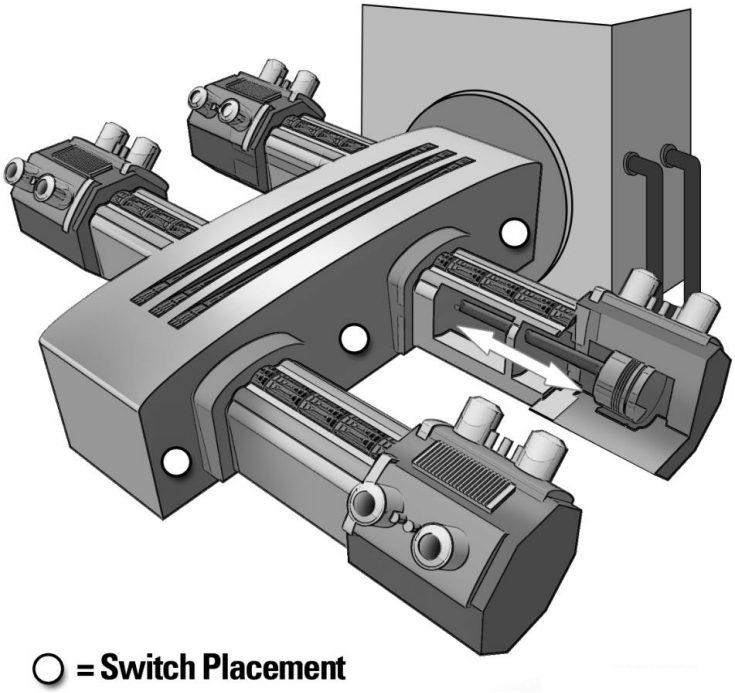

Reciprocating Compressor

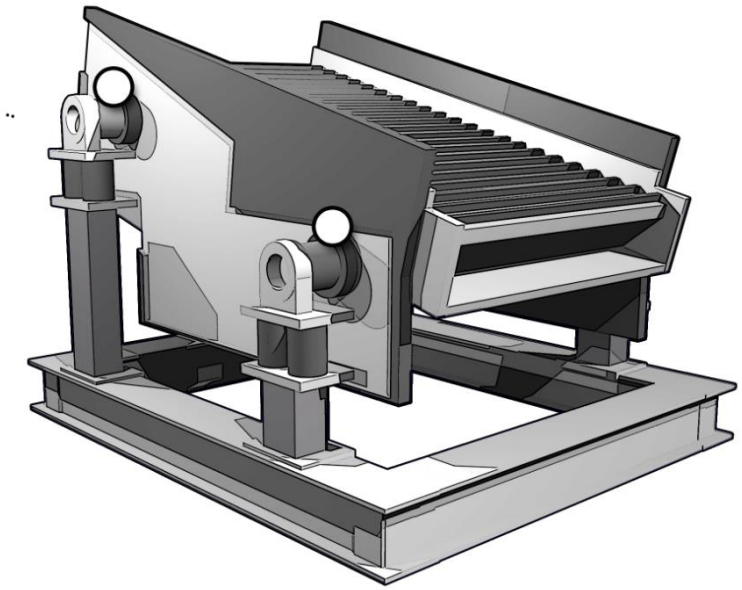

○ = Switch Placement

Vibratory Screens

Model Number 685A19	LINEAR ADJUST MECHANICAL VIBRATION SWITCH	Revision: B ECN #: 55476

Performance	ENGLISH	SI
Measurement Range	7 g pk	68.7 m/s² pk
Frequency Range	0 to 6,000 cpm	0 to 100 Hz
Relay	3A Form C 480 VAC	3A Form C 480 VAC
Relay(Contacts)(DPDT)	Normally Open / Closed	Normally Open / Closed
Control Interface		
Reset Function	Momentary Pushbutton Switch	Momentary Pushbutton Switch
Remote Reset	+/- 24 VDC	+/- 24 VDC
Environmental		
Temperature Range(Operating)	-40 to 140 °F	-40 to 60 °C
Enclosure Rating	IP66	IP66
Physical		
Size (Width x Height x Depth)	4.35 in x 3.30 in x 4.35 in	110.5 mm x 83.8 mm x 110.5 mm
Weight	2.8 lb	1,271 gm
Sensing Element	Magnet	Magnet
Housing Material	Aluminum Alloy	Aluminum Alloy
Electrical Connector	Screw Terminals	Screw Terminals
Screw Terminal Wire Size	24-14 AWG	0.2 - 2.5 mm²
Cable Input	3/4-14 NPT	3/4-14 NPT
Mounting Hole Size	0.25 in	6.4 mm
Sensing Geometry	Inertial Element	Inertial Element

CE

UK CA [1]

All specifications are at room temperature unless otherwise specified.
In the interest of constant product improvement, we reserve the right to change specifications without notice.

OPTIONAL VERSIONS

Optional versions have identical specifications and accessories as listed for the standard model except where noted below. More than one option may be used.

NOTES:

[1]PS206 Declaration of Conformity PS206

Entered: ND	Engineer: NJF	Sales: JL	Approved: NJF	Spec Number:
Date: 02/10/2025	Date: 02/10/2025	Date: 02/10/2025	Date: 02/10/2025	60551

IMI SENSORS
A PCB PIEZOTRONICS DIV.
3425 Walden Avenue, Depew, NY 14043

Phone: 800-959-4464
Fax: 716-684-3823
E-Mail: imi@pcb.com

56470

PCB Piezotronics Inc. claims proprietary rights in the information disclosed hereon. Neither it nor any reproduction thereof will be disclosed to others without the written consent of PCB Piezotronics Inc.

REVISIONS		
REV	DESCRIPTION	DIN
C	ADDED NOTE 1	46319

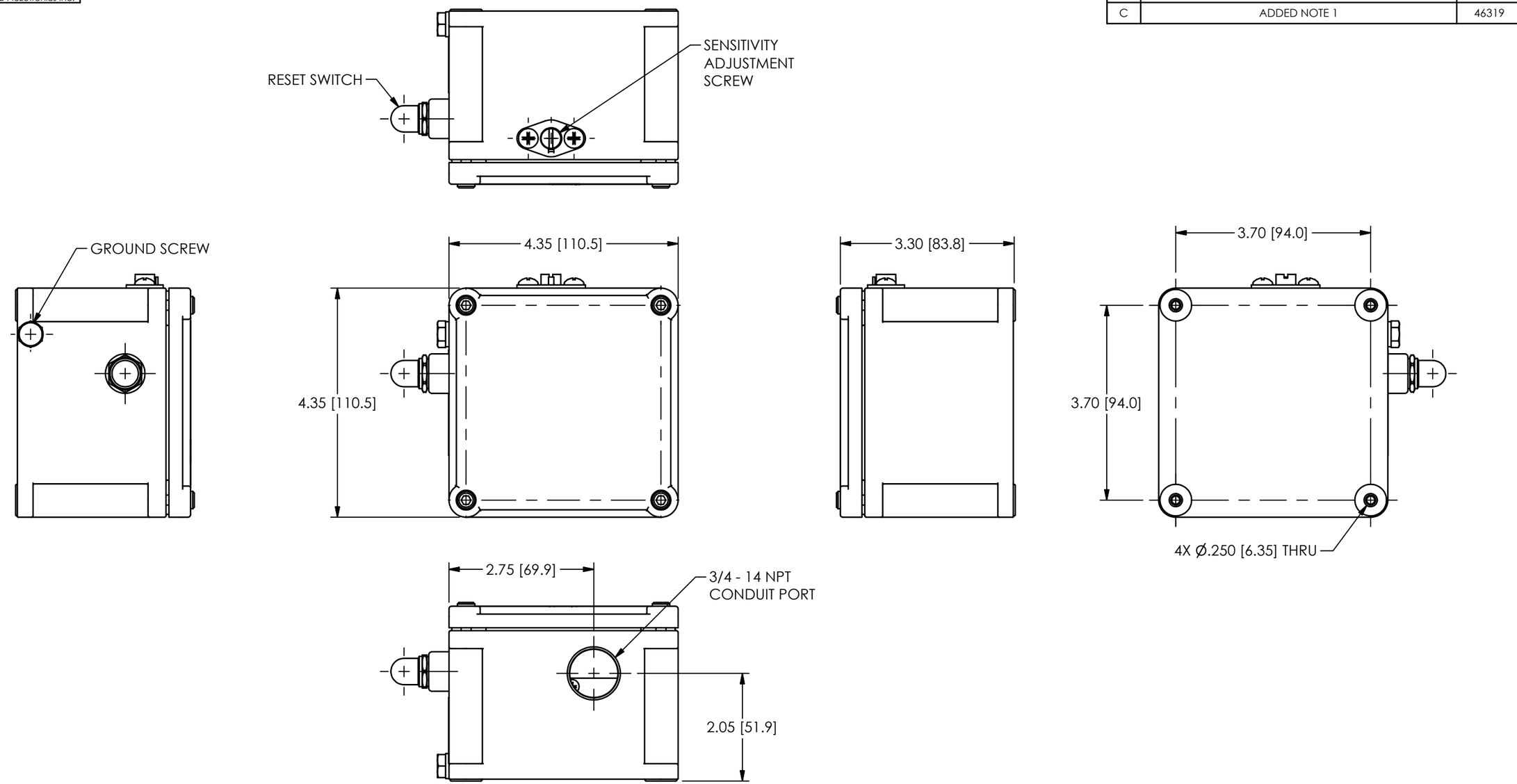

1.) THREADED PLUG NOT SHOWN

UNLESS OTHERWISE SPECIFIED TOLERANCES ARE:	
DIMENSIONS IN INCHES	DIMENSIONS IN MILLIMETERS [IN BRACKETS]
DECIMALS XX ±.03 XXX ±.010	DECIMALS X ± 0.8 XX ± 0.25
ANGLES ± 2 DEGREES	ANGLES ± 2 DEGREES
FILLETS AND RADII .003 - .005	FILLETS AND RADII 0.07 - 0.13

DRAWN		CHECKED		ENGINEER	
KRM	1/4/17	JDM	1/4/17	JDB	1/4/17

TITLE

OUTLINE DRAWING
MECHANICAL VIBRATION SWITCH
685A09, A19, A29, A39

PCB PIEZOTRONICS
3425 WALDEN AVE. DEPEW, NY 14043
(716) 684-0001 E-MAIL: sales@pcb.com

CODE IDENT. NO.	DWG. NO.
52681	56470
SCALE: .5X	SHEET 1 OF 1

PCB Piezotronics Inc. claims proprietary rights in the information disclosed hereon. Neither it nor any reproduction thereof will be disclosed to others without the written consent of PCB Piezotronics Inc.

62339

RELATED DRAWING

NO MODIFICATIONS PERMITTED WITHOUT THE APPROVAL OF THE AUTHORIZED PERSON

REVISIONS		
REV	DESCRIPTION	DIN
NR	RELEASED TO DRAFTING	45047

685A09

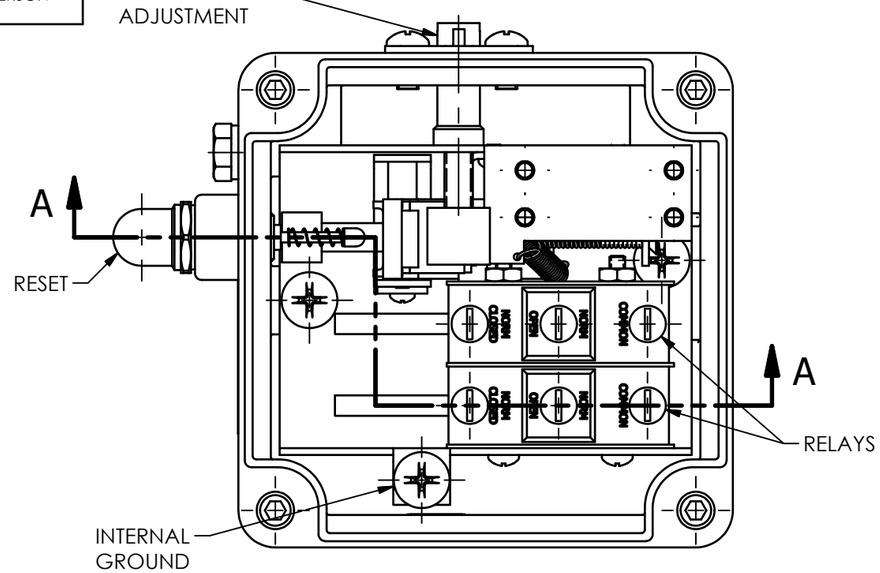

685A19/A29/A39

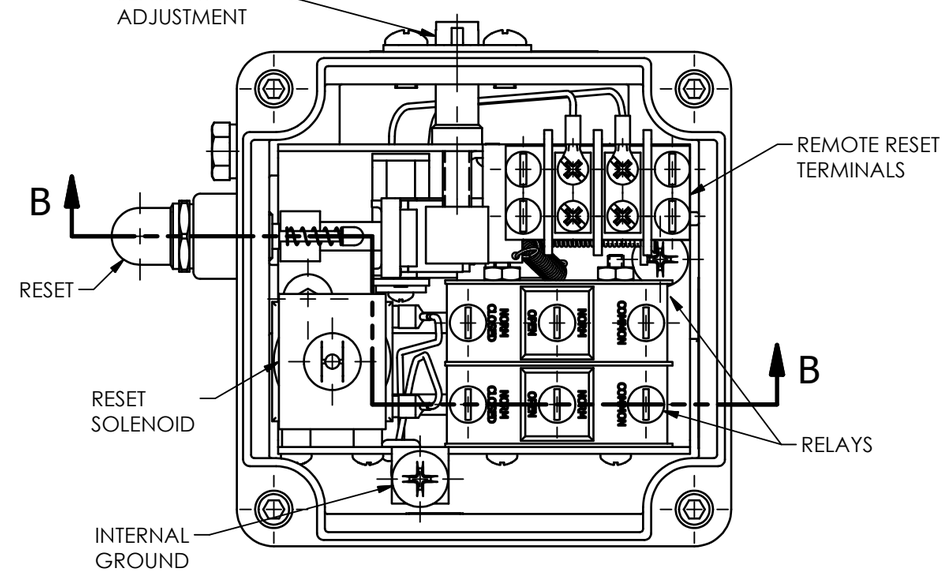

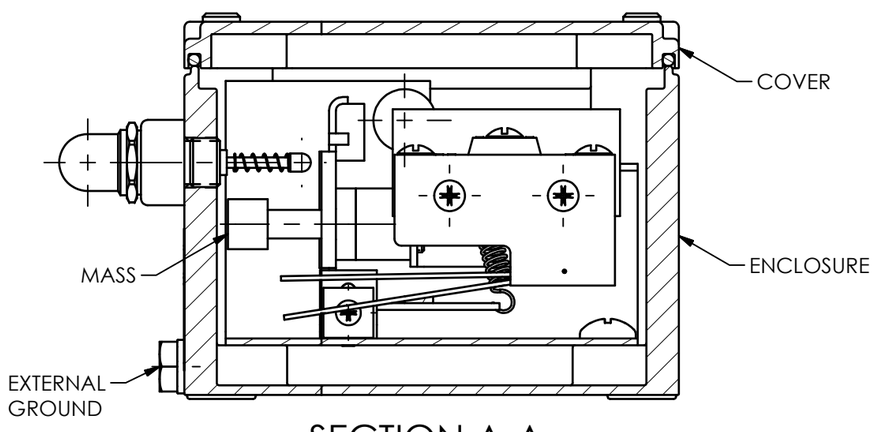

SECTION A-A

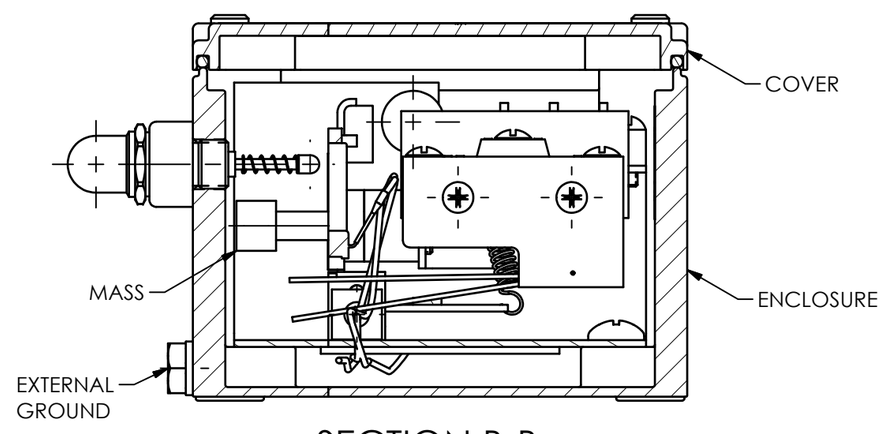

SECTION B-B

1.) TOP VIEWS SHOWN WITHOUT COVER FOR CLEARIFICATION

UNLESS OTHERWISE SPECIFIED
DIMENSIONS ARE IN INCHES DECIMALS X ± .05 XX ± .01 XXX ± .005 XXXX ± .0005 ANGLES ± 2 DEGREES FILLETS AND RADII .003 - .005
HEX DIMENSIONS ARE: ≤ .5 + .000 / - .003 > .5 + .000 / - .005
INTERNAL THREAD DEPTH MIN. REMOVE ALL BURRS SHARP = R.000 - R.003

DRAWN		CHECKED		ENGINEER	
JDM	3/16/16	ECB	3/16/16	LAB	3/16/16

TITLE

CSA APPROVAL DRAWING

PCB PIEZOTRONICS
3425 WALDEN AVE. DEPEW, NY 14043
(716) 684-0002 E-MAIL: sales@pcb.com

CODE IDENT. NO.	DWG. NO.	
52681	62339	
SCALE: .75X	SHEET 1 OF 3	

PCB Piezotronics Inc. claims proprietary rights in the information disclosed hereon. Neither it nor any reproduction thereof will be disclosed to others without the written consent of PCB Piezotronics Inc.

62339

RELATED DRAWING

NO MODIFICATIONS PERMITTED WITHOUT THE APPROVAL OF THE AUTHORIZED PERSON

REVISIONS		
REV	DESCRIPTION	DIN
	-SEE SHEET 1-	

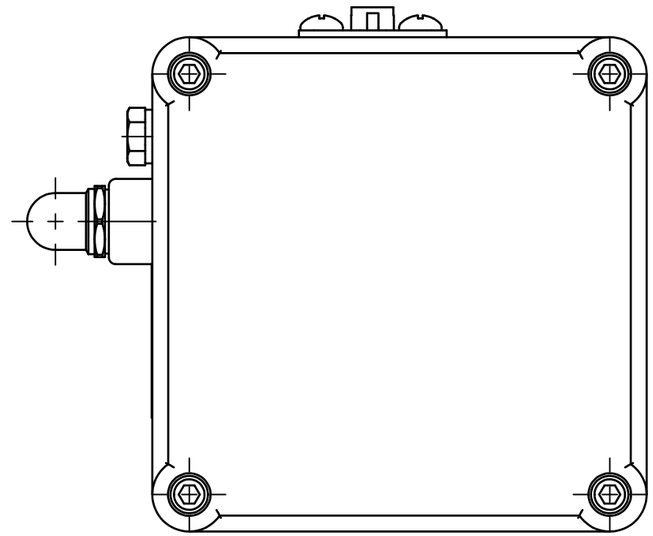

IMI SENSORS
A PCB PIEZOTRONICS DIV.
MECHANICAL VIBRATION SWITCH
MODEL 685AX9
PATENT 9,024,712
C US
70031613

1

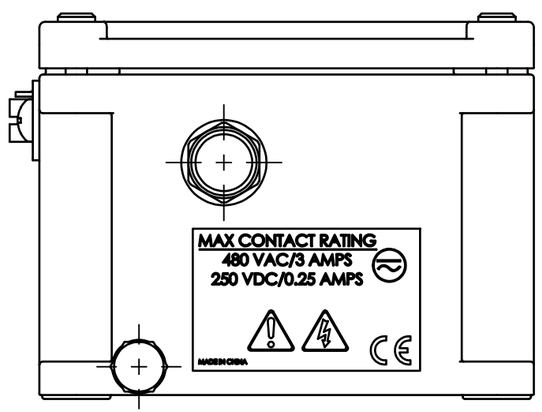

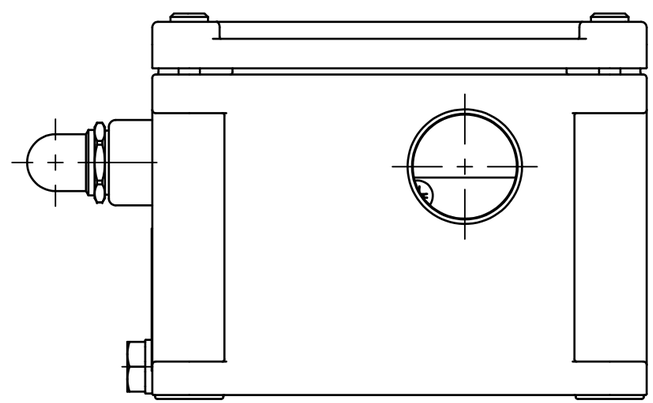

Marley
Model V6
Mechanical Vibration Switch
Part XXXXXXX
spxcooling.com 1 800 4MARLEY
C US
70031613
SN:
PATENT # 9,024,712

2

2 "XXXXXXX" DENOTES TYPE OF RESET
2396245- MANUAL RESET
2442494- REMOTE RESET (24VDC)
2442495- REMOTE RESET (120VAC)
2442496- REMOTE RESET (240VAC)

1 "X" DENOTES TYPE OF RESET.
685A09- MANUAL RESET
685A19- REMOTE RESET (24VDC)
685A29- REMOTE RESET (120VAC)
685A39- REMOTE RESET (240VAC)

UNLESS OTHERWISE SPECIFIED
DIMENSIONS ARE IN INCHES
DECIMALS X ± .05
XX ± .01
XXX ± .005
XXXX ± .0005
ANGLES ± 2 DEGREES
FILLETS AND RADII .003 - .005

HEX DIMENSIONS ARE:
≤ .5 + .000 / - .003
> .5 + .000 / - .005

INTERNAL THREAD DEPTH MIN.
REMOVE ALL BURRS
SHARP = R.000 - R.003

DRAWN		CHECKED		ENGINEER	
JDM	3/16/16	ECB	3/16/16	LAB	3/16/16

TITLE
CSA APPROVAL DRAWING

PCB PIEZOTRONICS
3425 WALDEN AVE. DEPEW, NY 14043
(716) 684-0002 E-MAIL: sales@pcb.com

CODE IDENT. NO.	DWG. NO.	
52681	62339	
SCALE: .75X		SHEET 2 OF 3

PCB Piezotronics Inc. claims proprietary rights in the information disclosed hereon. Neither it nor any reproduction thereof will be disclosed to others without the written consent of PCB Piezotronics Inc.

62339

RELATED DRAWING

NO MODIFICATIONS PERMITTED WITHOUT THE APPROVAL OF THE AUTHORIZED PERSON

REVISIONS		
REV	DESCRIPTION	DIN
	-SEE SHEET 1-	

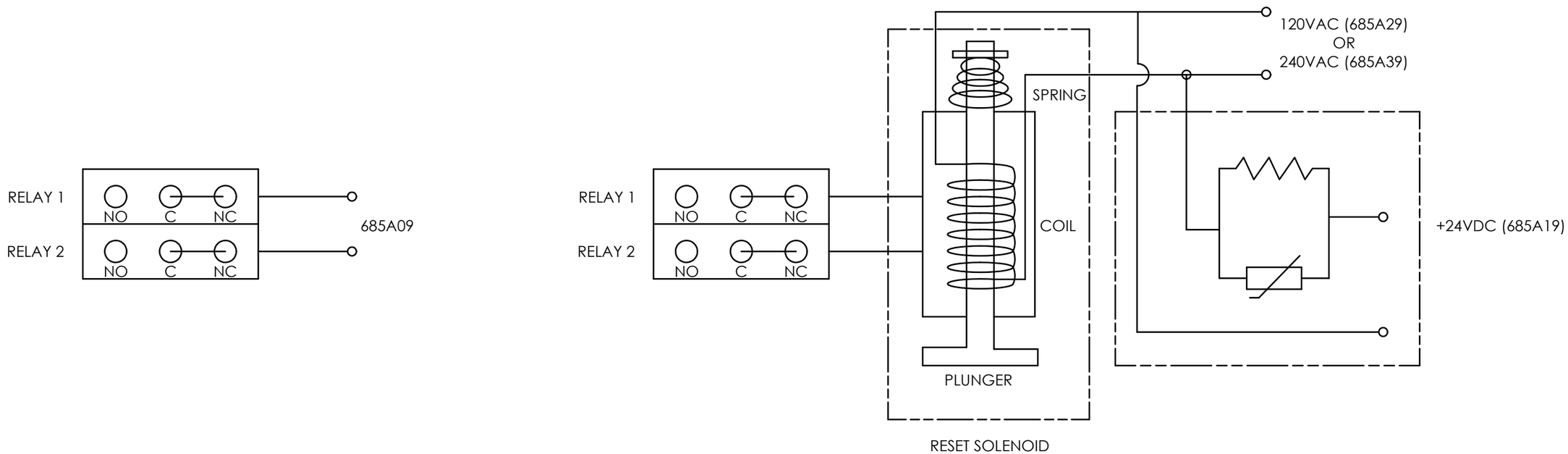

UNLESS OTHERWISE SPECIFIED
DIMENSIONS ARE IN INCHES DECIMALS X ± .05 XX ± .01 XXX ± .005 XXXX ± .0005 ANGLES ± 2 DEGREES FILLETS AND RADII .003 - .005
HEX DIMENSIONS ARE: ≤ .5 + .000 / - .003 > .5 + .000 / - .005
INTERNAL THREAD DEPTH MIN. REMOVE ALL BURRS SHARP = R.000 - R.003

DRAWN		CHECKED		ENGINEER	
JDM	3/16/16	ECB	3/16/16	LAB	3/16/16

TITLE

CSA APPROVAL DRAWING

PCB PIEZOTRONICS
3425 WALDEN AVE. DEPEW, NY 14043
(716) 684-0002 E-MAIL: sales@pcb.com

CODE IDENT. NO.	DWG. NO.
52681	62339
SCALE: NONE	SHEET 3 OF 3

PCB Piezotronics Inc. claims proprietary rights in the information disclosed hereon. Neither it nor any reproduction thereof will be disclosed to others without the written consent of PCB Piezotronics Inc.

62339

RELATED DRAWING

NO MODIFICATIONS PERMITTED WITHOUT THE APPROVAL OF THE AUTHORIZED PERSON

REVISIONS		
REV	DESCRIPTION	DIN
NR	RELEASED TO DRAFTING	45047

685A09

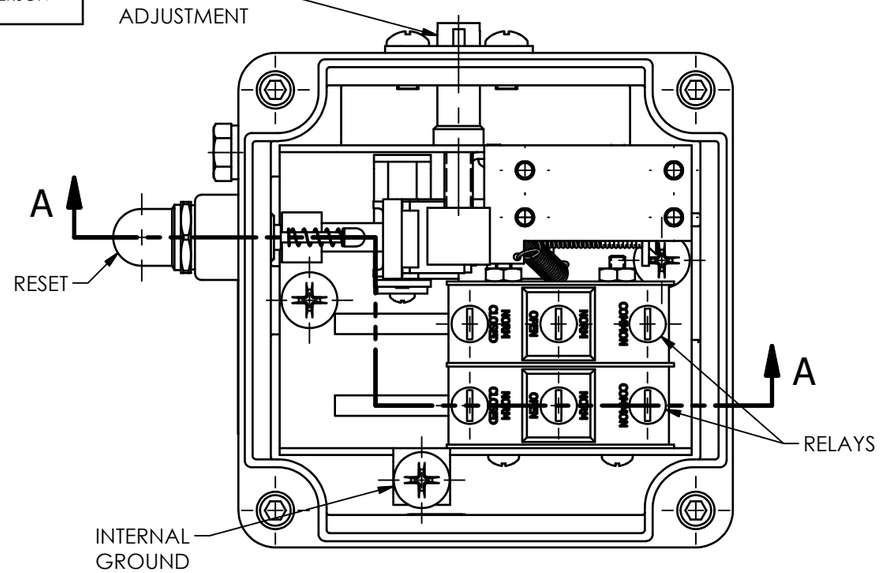

685A19/A29/A39

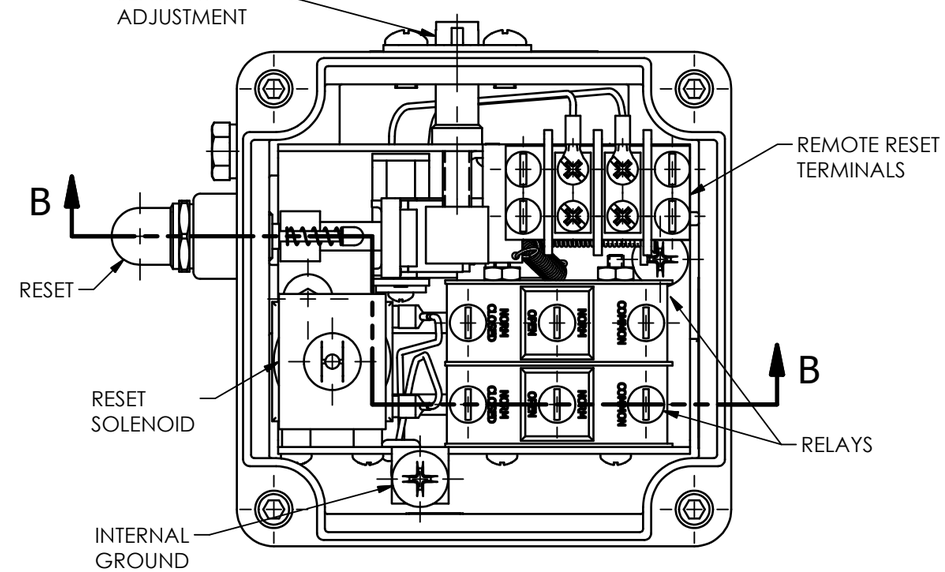

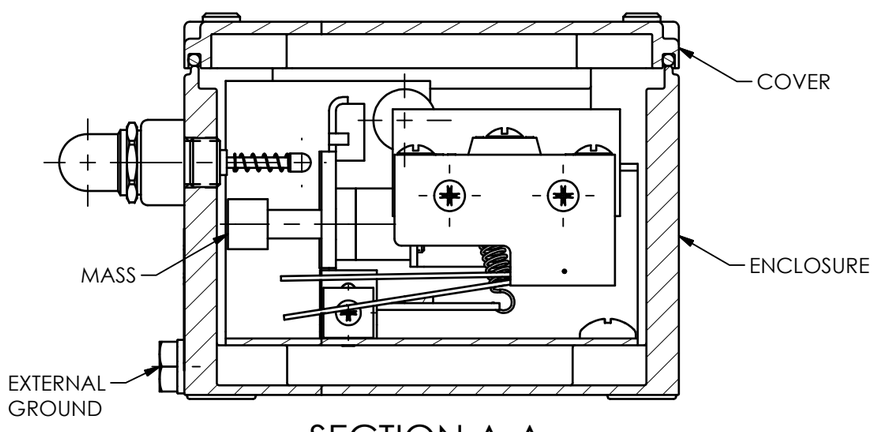

SECTION A-A

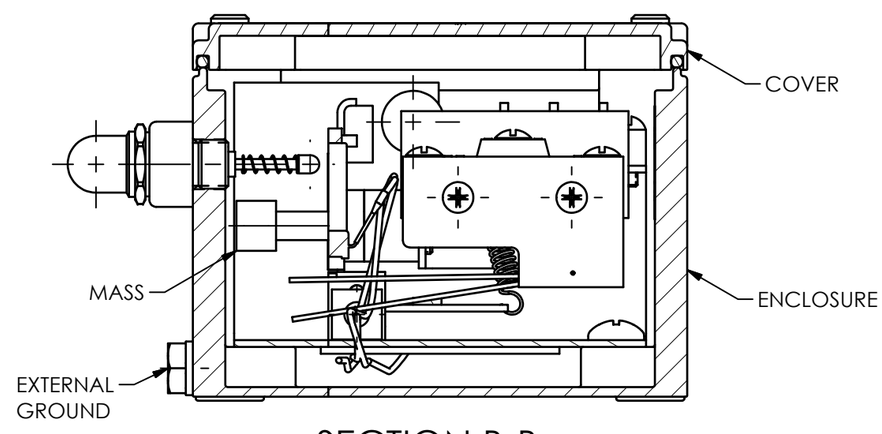

SECTION B-B

1.) TOP VIEWS SHOWN WITHOUT COVER FOR CLEARIFICATION

UNLESS OTHERWISE SPECIFIED
DIMENSIONS ARE IN INCHES DECIMALS X ± .05 XX ± .01 XXX ± .005 XXXX ± .0005 ANGLES ± 2 DEGREES FILLETS AND RADII .003 - .005
HEX DIMENSIONS ARE: ≤ .5 + .000 / - .003 > .5 + .000 / - .005
INTERNAL THREAD DEPTH MIN. REMOVE ALL BURRS SHARP = R.000 - R.003

DRAWN		CHECKED		ENGINEER	
JDM	3/16/16	ECB	3/16/16	LAB	3/16/16

TITLE

CSA APPROVAL DRAWING

PCB PIEZOTRONICS
3425 WALDEN AVE. DEPEW, NY 14043
(716) 684-0002 E-MAIL: sales@pcb.com

CODE IDENT. NO.	DWG. NO.	
52681	62339	
SCALE: .75X	SHEET 1 OF 3	

PCB Piezotronics Inc. claims proprietary rights in the information disclosed hereon. Neither it nor any reproduction thereof will be disclosed to others without the written consent of PCB Piezotronics Inc.

62339

RELATED DRAWING

NO MODIFICATIONS PERMITTED WITHOUT THE APPROVAL OF THE AUTHORIZED PERSON

REVISIONS		
REV	DESCRIPTION	DIN
	-SEE SHEET 1-	

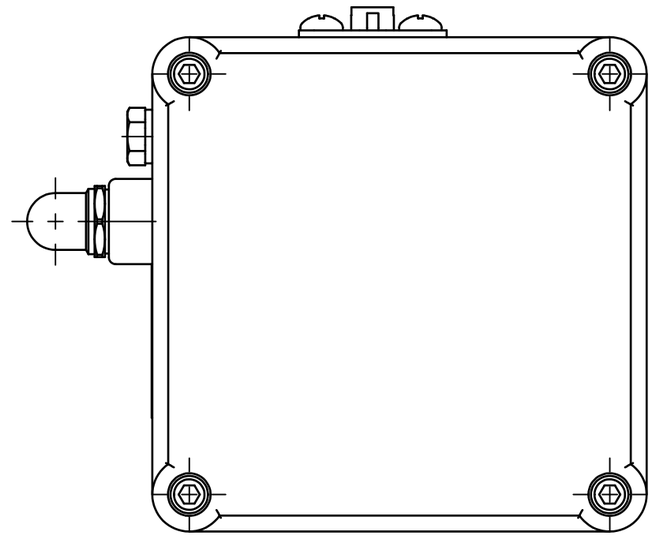

IMI SENSORS
A PCB PIEZOTRONICS DIV.
MECHANICAL VIBRATION SWITCH
MODEL 685AX9
PATENT 9,024,712
C US
70031613

1

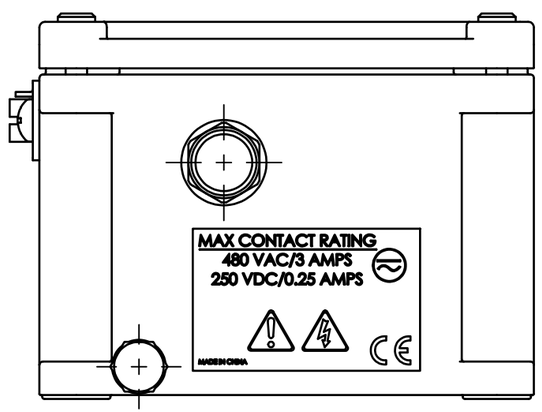

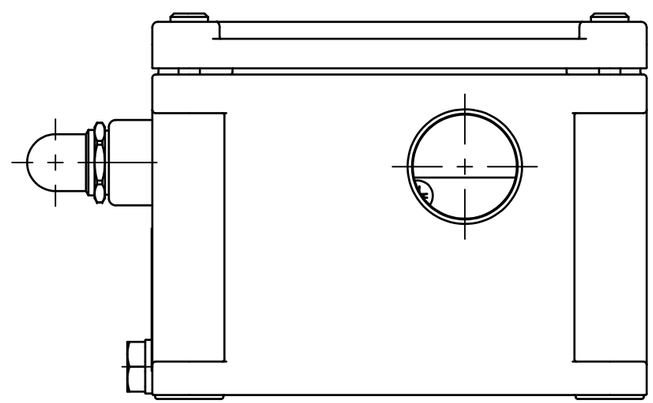

Marley
Model V6
Mechanical Vibration Switch
Part XXXXXXX
spxcooling.com 1 800 4MARLEY
C US
70031613
SN:
PATENT # 9,024,712

2

2 "XXXXXXX" DENOTES TYPE OF RESET
2396245- MANUAL RESET
2442494- REMOTE RESET (24VDC)
2442495- REMOTE RESET (120VAC)
2442496- REMOTE RESET (240VAC)

1 "X" DENOTES TYPE OF RESET.
685A09- MANUAL RESET
685A19- REMOTE RESET (24VDC)
685A29- REMOTE RESET (120VAC)
685A39- REMOTE RESET (240VAC)

UNLESS OTHERWISE SPECIFIED
DIMENSIONS ARE IN INCHES
DECIMALS X ± .05
XX ± .01
XXX ± .005
XXXX ± .0005
ANGLES ± 2 DEGREES
FILLETS AND RADII .003 - .005

HEX DIMENSIONS ARE:
≤ .5 + .000 / - .003
> .5 + .000 / - .005

INTERNAL THREAD DEPTH MIN.
REMOVE ALL BURRS
SHARP = R.000 - R.003

DRAWN		CHECKED		ENGINEER	
JDM	3/16/16	ECB	3/16/16	LAB	3/16/16

TITLE
CSA APPROVAL DRAWING

PCB PIEZOTRONICS
3425 WALDEN AVE. DEPEW, NY 14043
(716) 684-0002 E-MAIL: sales@pcb.com

CODE IDENT. NO.	DWG. NO.	
52681	62339	
SCALE: .75X		SHEET 2 OF 3

PCB Piezotronics Inc. claims proprietary rights in the information disclosed hereon. Neither it nor any reproduction thereof will be disclosed to others without the written consent of PCB Piezotronics Inc.

62339

RELATED DRAWING

NO MODIFICATIONS PERMITTED WITHOUT THE APPROVAL OF THE AUTHORIZED PERSON

REVISIONS		
REV	DESCRIPTION	DIN
	-SEE SHEET 1-	

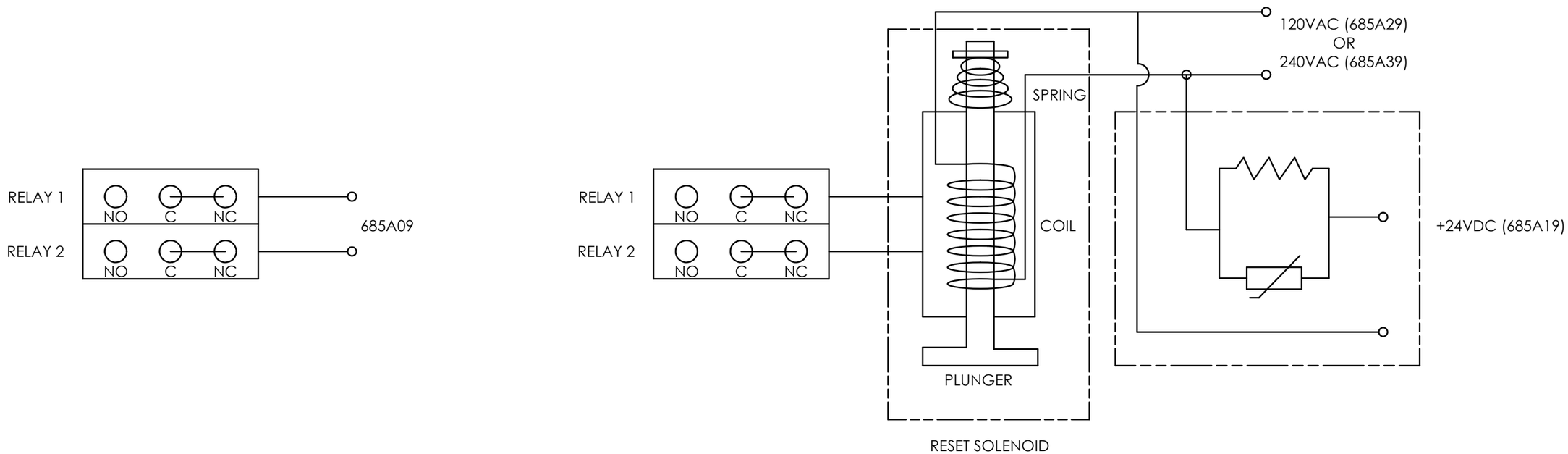

UNLESS OTHERWISE SPECIFIED
DIMENSIONS ARE IN INCHES DECIMALS X ± .05 XX ± .01 XXX ± .005 XXXX ± .0005 ANGLES ± 2 DEGREES FILLETS AND RADII .003 - .005
HEX DIMENSIONS ARE: ≤ .5 + .000 / - .003 > .5 + .000 / - .005
INTERNAL THREAD DEPTH MIN. REMOVE ALL BURRS SHARP = R.000 - R.003

DRAWN		CHECKED		ENGINEER	
JDM	3/16/16	ECB	3/16/16	LAB	3/16/16

TITLE

CSA APPROVAL DRAWING

PCB PIEZOTRONICS
3425 WALDEN AVE. DEPEW, NY 14043
(716) 684-0002 E-MAIL: sales@pcb.com

CODE IDENT. NO.	DWG. NO.
52681	62339
SCALE: NONE	SHEET 3 OF 3

IMI SENSORS
A PCB DIVISION

Model 685A19

Linear adjust mechanical switch, 0 to 7 g's, 0 to 100 Hz, pushbutton and remote (24 VDC) reset

Installation and Operating Manual

For assistance with the operation of this product,
contact the PCB Piezotronics, Inc.

Toll-free: 800-959-4464
24-hour SensorLine: 716-684-0001
Fax: 716-684-3823
E-mail: imi@pcb.com
Web: www.imi-sensors.com

Total Customer Satisfaction
IMI SENSORS
A PCB PIEZOTRONICS DIV.

EU Declaration of Conformity PS206

In Accordance with ISO/IEC 17050

Manufacturer:
PCB Piezotronics, Inc.
3425 Walden Avenue
Depew, New York 14043
USA

Authorized European Representative:
PCB Piezotronics GmbH
Porschestrasse 20-30
41836 Hückelhoven
Germany

Certifies that type of equipment: **Mechanical Vibration Switch**

Whose Product Models Include: **685Ax9 Series**

This declaration is applicable to all Mechanical Vibration Switches of the above series, which have the CE mark on their data sheets and where those data sheets refer to this declaration of conformity. The data sheets for all model numbers referenced above, which include the CE mark on such data sheets and refer to this Declaration of Conformity are hereby incorporated by reference into this Declaration.

Conform to the following EU Directive(s) when installed per product documentation:	2014/30/EU 2011/65/EU w/ 2015/863/EU	EMC Directive RoHS Directive

Harmonized Standards to which Conformity is Declared:

Harmonized Standards	EN 61326-1:2021 EN 61010-1:2010 EN 61010-1:2010/A1:2019/AC:2019-04 EN 61010-1:2010/A1:2019 EN 63000:2016+AMD1:2022	Electrical Equipment for Measurement, Control and Laboratory Use- EMC Safety and EMC requirements for electrical equipment in a laboratory setting Technical documentation for the assessment of electrical and electronic products with respect to the restriction of hazardous substances
Emissions Test Standards	EN 55011:2016 EN 55011:2016/A1:2017 EN 55011:2016/A11:2020	Industrial, scientific and medical (ISM) radio frequency equipment-Electromagnetic disturbance characteristics- Limits and methods of Measurement Class B
Other Standards Applied (non-OJEU) **Immunity Test Standards**	EN 61000-4-2:2001 EN 61000-4-3:2020 EN 61000-4-4:2012 EN 61000-4-6:2014 EN 61000-4-11:2020	Electromagnetic compatibility (EMC) - Part 4-2: Testing and measuring techniques – Electrostatic discharge immunity test. Electromagnetic compatibility (EMC) - Part 4-3: Testing and measurement techniques - Radiated, radio-frequency, electromagnetic field immunity test Electromagnetic compatibility (EMC) - Part 4-4: Testing and measurement techniques - Electrical fast transient/burst immunity test Electromagnetic compatibility (EMC) - Part 4-6: Testing and measurement techniques - Immunity to conducted disturbances, induced by radio-frequency fields Electromagnetic compatibility (EMC) - Part 4-11: Testing and measurement techniques - Voltage dips, short interruptions and voltage variations immunity tests

Test Reports	EMC Reports Safety Reports	GM215021c GM215022s

I, the undersigned, hereby declare that the equipment specified above conforms to the above Directive(s) Standard(s)

Place: Depew, NY **Date:** 12/04/2024

Signature:	
Name:	Lance Pellens
Title:	Director – Quality Assurance

UK Declaration of Conformity PS023UK

In Accordance with ISO/IEC 17050

Manufacturer:
PCB Piezotronics, Inc.
3425 Walden Avenue
Depew, New York 14043
USA

Authorized UK Representative:
PCB Piezotronics Ltd
Business and Technology Center
Bessemer Drive
Stevenage
Hertfordshire, SG1 2DX
United Kingdom

Certifies that type of equipment: **VC ACCEL, TRIAXIAL**

Whose Product Models Include: **773-30-U-120**

This declaration is applicable to all VC ACCEL, TRIAXIALS of the above series, which have the UKCA mark on their data sheets and where those data sheets refer to this declaration of conformity. The data sheets for all model numbers referenced above, which include the CE mark on such data sheets and refer to this Declaration of Conformity are hereby incorporated by reference into this Declaration.

This declaration is applicable to all sensors of the above series, which have the UKCA mark on their data sheets and where those data sheets refer to this Declaration of Conformity. The data sheets for all model numbers referenced above, which include the UKCA mark on such data sheets and refer to this Declaration of Conformity are hereby incorporated by reference into this Declaration.

Conform to the following UK Statutory Requirements when installed per product documentation: The Restriction of the Use of Certain Hazardous Substances in Electrical and Electronic Equipment Regulations 2012 (SI2012No3032 as Amended bySI2019 No696)

Designated Standards to which Conformity is Declared:

Designated Standards	BS EN 61326-1:2021	Electrical Equipment for Measurement, Control and Laboratory Use- EMC
	BS EN 61010-1:2010 BS EN 61010-1:2010/A1:2019/AC:2019-04 BS EN 61010-1:2010/A1:2019	Safety and EMC requirements for electrical equipment in a laboratory setting
	BS EN 63000:2016+AMD1:2022	Technical documentation for the assessment of electrical and electronic products with respect to the restriction of hazardous substances
Emissions Test Standards	BS EN 55011:2016 BS EN 55011:2016/A1:2017 BS EN 55011:2016/A11:2020	Industrial, scientific and medical (ISM) radio frequency equipment-Electromagnetic disturbance characteristics- Limits and methods of Measurement Class B
Other Standards Applied (non-OJEU) **Immunity Test Standards**	BS EN 61000-4-2:2001	Electromagnetic compatibility (EMC) - Part 4-2: Testing and measuring techniques – Electrostatic discharge immunity test.
	BS EN 61000-4-3:2020	Electromagnetic compatibility (EMC) - Part 4-3: Testing and measurement techniques - Radiated, radio-frequency, electromagnetic field immunity test
	BS EN 61000-4-4:2012	Electromagnetic compatibility (EMC) - Part 4-4: Testing and measurement techniques - Electrical fast transient/burst immunity test
	BS EN 61000-4-6:2014	Electromagnetic compatibility (EMC) - Part 4-6: Testing and measurement techniques - Immunity to conducted disturbances, induced by radio-frequency fields
	BS EN 61000-4-11:2020	Electromagnetic compatibility (EMC) - Part 4-11: Testing and measurement techniques - Voltage dips, short interruptions and voltage variations immunity tests

Test Reports	EMC Reports Safety Reports	GM215021c GM215022s

I, the undersigned, hereby declare that the equipment specified above conforms to the above Directive(s) Standard(s)

Place: Depew, NY **Date:** 12/04/2024

Signature:	
Name:	Lance Pellens
Title:	Director – Quality Assurance

CSA Group

Certificate of Compliance

Certificate: 70031613 (184981)

Master Contract: 184981

Project: 70031613

Date Issued: 2015-08-11

Issued to: **Industrial Monitoring Instr. (IMI)**
A Div. of PCB Piezotronics, Inc.(IMI)
3425 Walden Ave
Depew, New York 14043
USA

Attention: **Carrie Termin**

The products listed below are eligible to bear the CSA Mark shown with adjacent indicators 'C' and 'US' for Canada and US or with adjacent indicator 'US' for US only or without either indicator for Canada only.

C US

Issued by: Marin Banu
Marin Banu

PRODUCTS

CLASS - C225206 - PROCESS CONTROL EQUIPMENT

CLASS - C225286 - PROCESS CONTROL EQUIPMENT-Certified to US Standards

Mechanical Vibration Switch, Models 685A09, 685A19 , 685A29 and 685A39; rated 24Vdc, 120 Vac, 50/60 Hz, 3 A & 240 Vac, 50/60 Hz 0.25 A. Intermittent Operating Conditions 25% ON and 75% OFF. Ambient Temperature 5°C to +40°C.

Notes:

1. Class I, permanently connected equipment
2. Rated: Pollution Degree 2, Overvoltage Category II.
3. Environmental Conditions: 2000 m max

APPLICABLE REQUIREMENTS

CAN/CSA-C22.2 No. 61010-1-12 - Safety Requirements for Electrical Equipment for Measurement,

62417
REV: NR
DIN: 45047

UL Std. No. 61010-1 (3rd Edition) - Control, and Laboratory Use, Part 1: General Requirements - Safety Requirements for Electrical Equipment for Measurement, Control, and Laboratory Use - Part 1: General Requirements

MARKINGS

The following markings appear on the product:

1. Submittor's identification (company name and/or file number and/or registered tradename);
2. Marking on the unit that indicates the manufacturing location if the equipment is manufactured at more than one factory location. Model designation;
3. Electrical rating;
4. Date of manufacture: Month and year of manufacture or date code. If a serial number is used instead of date of manufacture, a record of serial numbers shall be kept traceable to date of manufacture. (Not related to date of sale).
5. The products listed are eligible to bear the CSA Mark shown with adjacent indicators 'C' and 'US' for Canada and US, or with adjacent indicator 'US' for US only, or without either indicator for Canada only:

c us, or US, or .

Note Jurisdictions in Canada may require these markings to be also in French. It is the responsibility of the Customer to provide bilingual marking, where applicable, in accordance with the requirements of the Provincial Regulatory Authorities. It is the responsibility of the Customer to determine this requirement and have bilingual wording added to the "Markings".

Marking Method: The above markings are made via silk screening, die stamping, moulding or on CSA certified or UL recognized adhesive nameplate material, compatible with the surface used; or other equivalent permanent means that can pass the label rub test.

Repair and Maintenance

PCB guarantees Total Customer Satisfaction through its "Lifetime Warranty Plus" on all Platinum Stock Products sold by PCB and through its limited warranties on all other PCB Stock, Standard and Special products. Due to the sophisticated nature of our sensors and associated instrumentation, **field servicing and repair is not recommended and, if attempted, will void the factory warranty**.

Beyond routine calibration and battery replacements where applicable, our products require no user maintenance. Clean electrical connectors, housings, and mounting surfaces with solutions and techniques that will not harm the material of construction. Observe caution when using liquids near devices that are not hermetically sealed. Such devices should only be wiped with a dampened cloth—never saturated or submerged.

In the event that equipment becomes damaged or ceases to operate, our Application Engineers are here to support your troubleshooting efforts 24 hours a day, 7 days a week. Call or email with model and serial number as well as a brief description of the problem.

Calibration

Routine calibration of sensors and associated instrumentation is necessary to maintain measurement accuracy. We recommend calibrating on an annual basis, after exposure to any extreme environmental influence, or prior to any critical test.

PCB Piezotronics is an ISO-9001 certified company whose calibration services are accredited by A2LA to ISO/IEC 17025, with full traceability to SI through N.I.S.T. In addition to our standard calibration services, we also offer specialized tests, including: sensitivity at elevated or cryogenic temperatures, phase response, extended high or low frequency response, extended range, leak testing, hydrostatic pressure testing, and others. For more information, contact your local PCB Piezotronics distributor, sales representative, or factory customer service representative.

Returning Equipment

If factory repair is required, our representatives will provide you with a Return Material Authorization (RMA) number, which we use to reference any information you have already provided and expedite the repair process. This number should be clearly marked on the outside of all returned package(s) and on any packing list(s) accompanying the shipment.

Contact Information

PCB Piezotronics, Inc.
3425 Walden Ave.
Depew, NY14043 USA
Toll-free: (800) 828-8840
24-hour SensorLine: (716) 684-0001
General inquiries: info@pcb.com
Repair inquiries: rma@pcb.com

For a complete list of distributors, global offices and sales representatives, visit our website, www.pcb.com.

Safety Considerations

This product is intended for use by qualified personnel who recognize shock hazards and are familiar with the precautions required to avoid injury. While our equipment is designed with user safety in mind, the protection provided by the equipment may be impaired if equipment is used in a manner not specified by this manual.

Discontinue use and contact our 24-Hour Sensorline if:

- Assistance is needed to safely operate equipment
- Damage is visible or suspected
- Equipment fails or malfunctions

For complete equipment ratings, refer to the enclosed specification sheet for your product.

Definition of Terms and Symbols

The following symbols may be used in this manual:

DANGER
Indicates an immediate hazardous situation, which, if not avoided, may result in death or serious injury.

CAUTION
Refers to hazards that could damage the instrument.

NOTE
Indicates tips, recommendations and important information. The notes simplify processes and contain additional information on particular operating steps.

The following symbols may be found on the equipment described in this manual:

This symbol on the unit indicates that high voltage may be present. Use standard safety precautions to avoid personal contact with this voltage.

This symbol on the unit indicates that the user should refer to the operating instructions located in the manual.

This symbol indicates safety, earth ground.

PCB- PCB工业监测和测量设备 - 中国RoHS 公布表

PCB Industrial Monitoring and Measuring Equipment - China RoHS Disclosure Table

部件名称 Part Name	有毒和危险品 Toxic and Hazardous Substances or Elements									
Part	铅 (Pb)	水银 (Hg)	镉 (Cd)	六价 铬 (Cr(VI)	多溴化 苯 (PBB)	多溴化二苯 醚 (PBDE)	邻苯二甲酸 二(2-乙基) 己酯 (DEHP)	邻苯二甲丁 基苄酯 (BBP)	邻苯二甲酸 二酸正丁酯 (DBP)	邻苯二甲酸 二异丁酯 (DIBP)
电气外壳 (Electrical Enclosures)	X	O	O	O	O	O	O	O	O	O
紧固件和弹簧 (Fasteners)	X	O	O	O	O	O	O	O	O	O
电缆组件 (Cable Assembly)	X	O	O	O	O	O	O	O	O	O
印刷电路板组装 (PCBAs)	X	O	O	O	O	O	O	O	O	O
机械零件(Mechanical Parts)	O	O	O	O	O	O	O	O	O	O
塑料和橡胶零件 (Plastic & Rubber Parts)	O	O	O	O	O	O	O	O	O	O
金属零件 (Metal Parts)	X	O	O	O	O	O	O	O	O	O

本表格依据 SJ/T 11364 的规定编制

O =表示该有害物质在该部件所有均质材料中的含量均在 GB/T 26572 规定的限量要求以下 (indicates that the content of the toxic and hazardous substance in all the Homogeneous Materials of the part is below the concentration limit requirement as described in GB/T 26572).

X =表示该有害物质至少在该部件的某一均质材料中的含量超出 GB/T 26572 规定的限量要求 (indicates that the content of the toxic and hazardous substance in at least one Homogeneous Material of the part exceeds the concentration limit requirement as described in GB/T 26572).