10285

APPLICATION		
NEXT ASS'Y	USED ON	VAR

REVISIONS				
REV	DESCRIPTION	ECN	DATE	APP'D

PCB Piezotronics Inc. claims proprietary rights in the information disclosed hereon. Neither it nor any reproduction thereof will be disclosed to others without written consent of PCB Piezotronics Inc.

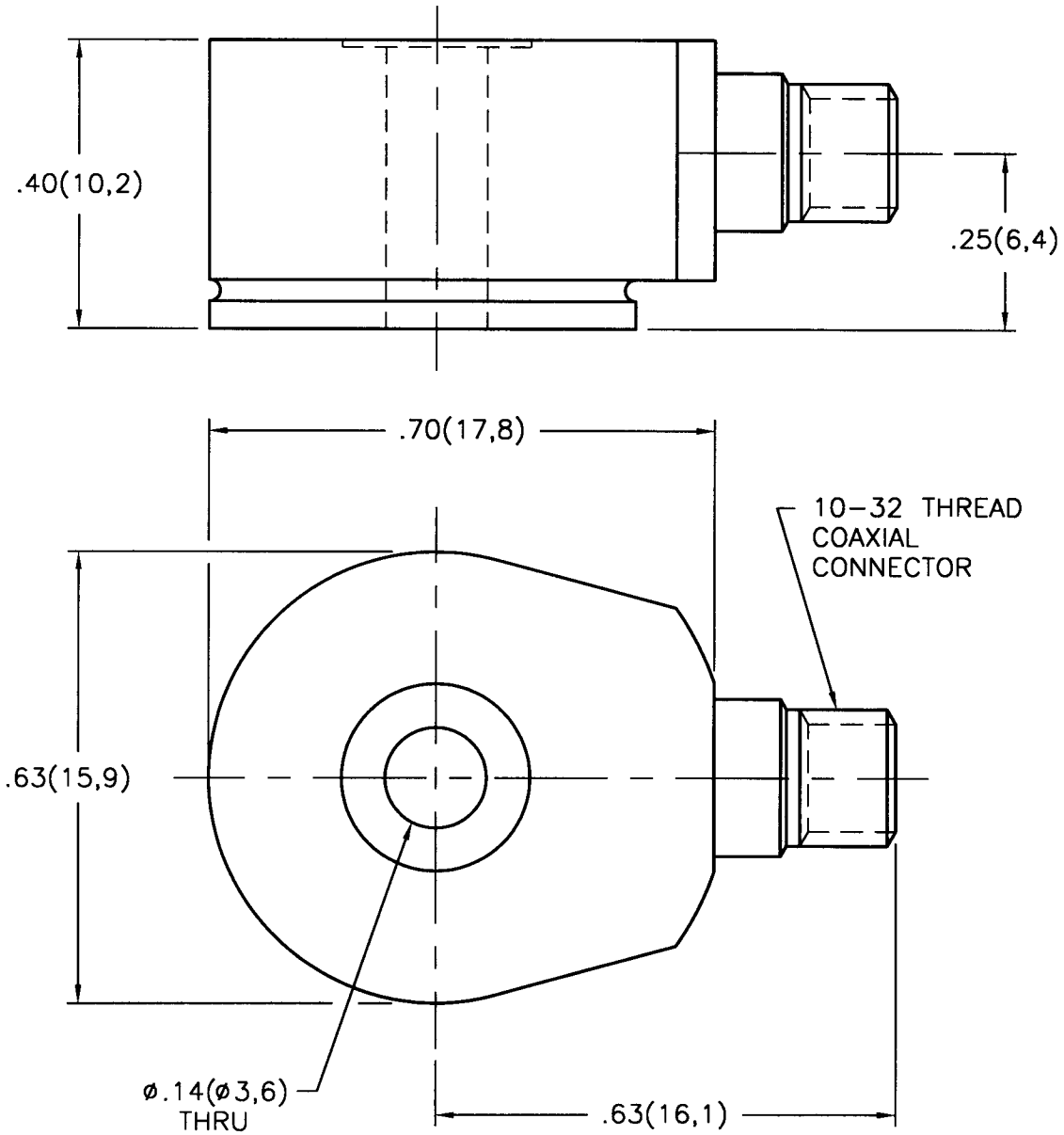

UNLESS SPECIFIED TOLERANCES	
DIMENSIONS IN INCHES DECIMALS XX ±.01 XXX ±.005 ANGLES ±2 DEGREES	DIMENSIONS IN MILLIMETERS (IN PARENTHESIS) DECIMALS XX ±0.3 XXX ±0.13 ANGLES ±2 DEGREES
FILLETS AND RADII .003 - .005	FILLETS AND RADII (0.07 - 0.13)
DD011 REV. B 03/13/98	

DRAWN	[illegible]	5/21/99	MFG	DA	5/21/99
CHK'D	[illegible]	5/21/99	ENGR		
APP'D	[illegible]	5/21/99	SALES	SL	5/21/99

TITLE
OUTLINE DRAWING
MODEL 355B03
ACCELEROMETER

PCB PIEZOTRONICS
3425 WALDEN AVE. DEPEW, NY 14043
(716) 684-0001 EMAIL: SALES@PCB.COM

CODE IDENT. NO.	DWG. NO.
52681	10285
SCALE: 4X	SHEET 1 OF 1